“Simplicity is the most difficult thing to secure in this world;
it is the last limit of experience and the last effort of genius”

George Sand

AIREKA

- PNEUMATIC COOLERS
- ELECTRONICALLY-CONTROLLED PNEUMATIC COOLERS
- AIR KNIVES
- AIR AMPLIFIERS AND NOZZLES
- CONDENSATE SEPARATORS

WHY AIREKA

AIREKA is the new brand under which Stima S.p.A. has decided to gather a series of diverse products that share the common feature of being simple and yet innovative solutions to long-standing and complex issues, for which we believe the market does not offer adequate answers. The simplicity is the result of creative work, know-how, and extensive experience that the designers instilled in these products. So, special features make them one-of-a-kind.
Always with a great focus on customers' demands.

Simian Project S.r.l. was started in 2007 as a result of the business flair and experience of Leonardo Lombardi as a designer in the automotive and packaging industries. Creativity, dynamism, and efficiency are the qualities that characterise both the products and the work methods of the company, by offering customers tailor-made solutions with quick turnaround time and high added value.
Made in italy

TABLE OF CONTENTS

AIREKA

EXAMPLES OF SECTORS OF APPLICATION

PNEUMATIC COOLERS

- **MACHINE TOOLS / MACHINING**
  Cooling of machined parts and of tools: milling, turning, cutting, etc.; cooling of blades and saws, etc.
- **AUTOMATIC MACHINERY / PACKAGING**
  Cooling of control cabinets, of closing points of bags, of welding points, of glues, of foils for packaging, of control displays, of touch panels, etc.
- **COMPOSITE MATERIALS**
  Tooling, machining, etc.; carbon fibres' processing.
- **MOULDING**
  Both for plastics and metals. Cooling of moulds, sprues, and moulded parts.
- **FOUNDRIES**
  Cooling of moulds and workpieces.
- **PRESSES**
  Cooling of electric motors and of parts of the press itself.
- **PAPER PROCESSING**
  Cooling of blades.
- **TEXTILE**
  Cooling of needles.
- **LASER CUTTING**
- **TUBES EXTRUSION**
- **LINEAR MOTORS**.

AIR KNIVES

- **PACKAGING**
  Cleaning of parts on conveyor belts, opening of plastic bags, blowing plastic films, etc.
- **MACHINE TOOLS / MACHINING**
  To clean and dry machined parts, cleaning of machine windows, etc.
- **WOODWORKING**
  To clean panels, to blow-off shavings, etc.
- **AUTOMOTIVE**
  Cleaning and drying of vehicles' bodies before finishing.
- **FINISHING**
  Drying of surfaces before painting.
- **FOODSTUFFS**
- Drying of bottles after filling, to clean vegetables, to clean photocells and optical sensors.
- **PAPER PROCESSING**
  Sheeting, browsing of foils, to remove scraps, etc.
- **TILES / CERAMICS**
  To dry and clean tiles.
- **INDUSTRIAL LAUNDERING**
  To dry parts.

AIR AMPLIFIERS

- **PACKAGING / AUTOMATIC MACHINERY**
  To convey granules, tobacco, coffee powder, etc., to either blow-off and suction shavings.
- **MACHINE TOOLS**
  To blow-off shavings and scraps, to empty tanks of emulsified water, etc.
- **WOODWORKING**
  To blow-off shavings.
- **WELDING**
  Aspiration of fumes and gases
- **PHARMACEUTICAL**
  Conveying of pills.
- **WIRES EXTRUSION**
  To clean the wire.
- **3D PRINTERS**
  Conveying of plastic granules.

AIREKA

Series VR / VRX

Pneumatic coolers

Excellent performances, optimised technical features, wide range, and customised versions

The **VR / VRX SERIES** coolers are state-of-the-art solutions for compressed-air cooling based on the principle of the Vortex Tube. The excellent performances of flow-rate and ΔT generated, the design, the fastenings that make them extremely versatile to mount, and the possibility to combine them in a patented system with the air amplifiers (to use the hot air flow), offer customers an innovative, effective, and inexpensive solution to cool down metal and plastic parts, electric and electronic control cabinets, and mechanical applications. All this with a simple connection to the compressed-air line.

- ΔT up to -40°C for the cold flow and +60°C for the hot flow, in comparison to the temperature of air at inlet
- Easy to install, thanks to flanges and magnetic supports
- Patented system of hot air's recovery to actuate an amplifier/conveyor
- Made of corrosion-resistant materials
- No moving part, so not subject to wear and tear
- No electricity or chemical substances required
- They do not cause either sparkles or interferences
- Instant operation
- Reliable and maintenance-free

AIREKA

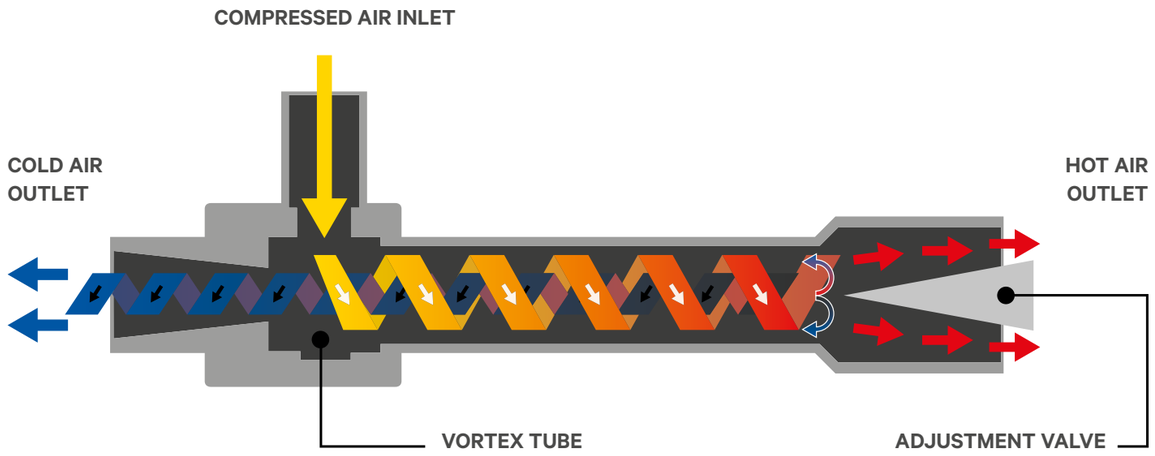

Ranque-Hilsch tube (Vortex tube)

DESCRIPTION OF VORTEX TUBES

The Ranque-Hilsch tube, in the industrial sector better known as “Vortex tube”, is a device that splits a compressed-air flow in 2 separate streams: one of cold air, and one of hot air.

The core of the system is the vortex chamber, which is connected to 2 opposed tubes, one of which features a valve. When the compressed air is injected tangentially in the chamber, this causes the rotary movement of air towards one of the exits. This vortex moves rotating at high speed and brushing against the inner side of the tube, increasing in temperature; the valve placed at the hot air outlet enables some of it to be exhausted. The remaining part goes back, creating a low pressure vortex moving towards the other exit and giving away heat to the first vortex. So, this flow is much colder.

The ΔT generated is inversely proportional to the volume of the flow. The differences in temperature are considerable and can reach -40°C for the cold flow and 60°C for the hot flow.

In the industrial field the Vortex tubes have been employed for a long time and have found a variety of applications in which they offer a major added value. They have great cooling performances, are very easy to install and have instant operation, have no moving part and therefore are maintenance-free. Plus, they do not require electric power, so they are suitable for dangerous environments and humid areas.

If the application enables their use, they are price-worthier than electric coolers. Our coolers SERIES VR and VRX, beside the excellent performances in comparison to the other products in the market, were designed to be easily customised according to customers’ demands.

AIREKA

SERIES VR-100
PNEUMATIC COOLERS

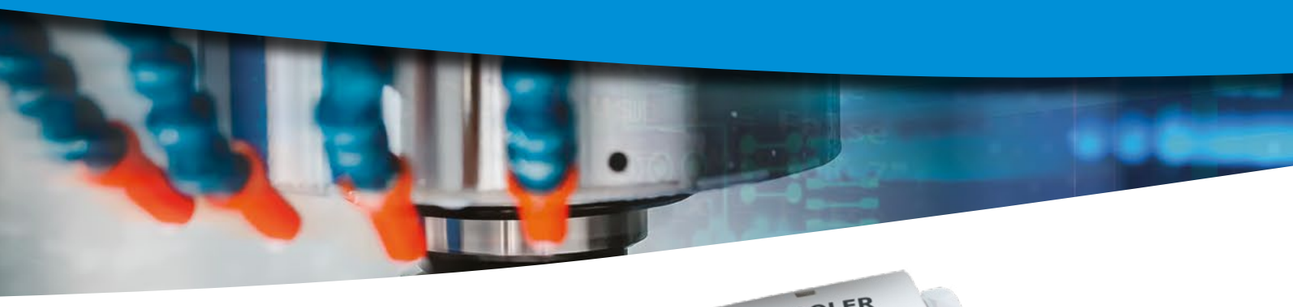

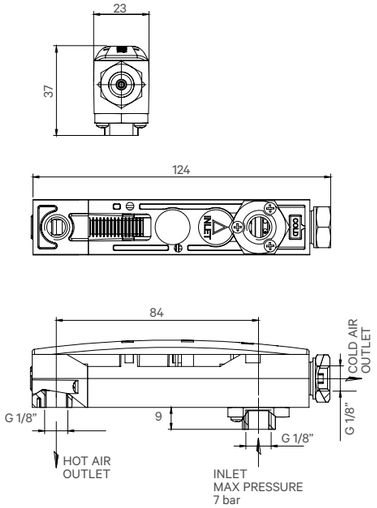

GENERAL FEATURES - VR-100

Materials	Body and cover: Nylon 6.6
	Air connections and nozzles: brass
Air inlet port	G-1/8" F
Outlet port (cold flow)	G-1/8" F
Exhaust port (hot flow)	G-1/8" F
Recommended hose	Ø-8x1
Air supply pressure	3 ÷ 7 Bar
Cooling power*	120 W - 100 Kcal/h - 400 BTUH
Optional magnetic support	KACM-VR100

*with inlet pressure 7 Bar and inlet temperature 20°C

PERFORMANCES AND CONSUMPTION TABLE (with air temperature at inlet 20°C)

Pressure [Bar]	Outlet temperature cold flow [°C]	Consumption [NL/min]
1	-1.5	32
2	-8	53
3	-15	74
4	-21,5	94
5	-24,5	115
6	-26,5	135
7	-28	154

SERIES VR-200
PNEUMATIC COOLERS

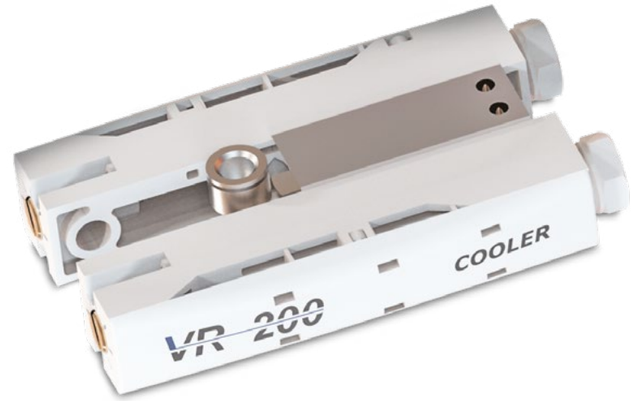

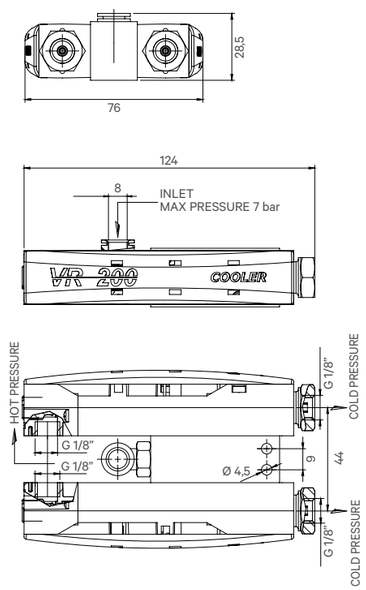

GENERAL FEATURES - VR-200

Materials	Body and cover: Nylon 6.6
	Air connections and nozzles: brass
Air inlet port	Push-in fitting Ø-8x6
Outlet port (cold flow)	2 x G-1/8" F
Exhaust port (hot flow)	2 x G-1/8" F
Recommended hose	Ø-8x1
Air supply pressure	3 ÷ 7 Bar
Cooling power*	240 W - 200 Kcal/h - 800 BTUH
Optional magnetic support	KACM-VR200

*with inlet pressure 7 Bar and inlet temperature 20°C

PERFORMANCES AND CONSUMPTION TABLE (with air temperature at inlet 20°C)

Pressure [Bar]	Outlet temperature cold flow [°C]	Consumption [NL/min]
1	-1,5	64
2	-8	106
3	-15	148
4	-21,5	196
5	-24,5	230
6	-26,5	270
7	-28	308

SERIES VR-300T • 3 OUTLETS
PNEUMATIC COOLERS

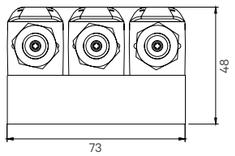

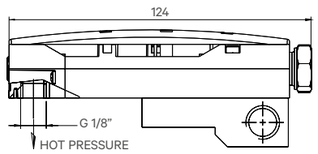

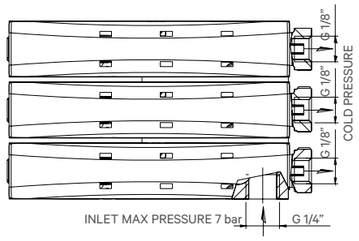

GENERAL FEATURES - VR-300T	
Materials	Body and cover: Nylon 6.6
	Air connections and nozzles: brass
Air inlet port	G-1/4" F
Outlet port (cold flow)	3 x G-1/8" F
Exhaust port (hot flow)	3 x G-1/8" F
Recommended hose	Ø-8x1
Air supply pressure	3 ÷ 7 Bar
Cooling power*	360 W - 300 Kcal/h - 1200 BTUH
Optional magnetic support	KACM-VR300

*with inlet pressure 7 Bar and inlet temperature 20°C

PERFORMANCES AND CONSUMPTION TABLE (with air temperature at inlet 20°C)

Pressure [Bar]	Outlet temperature cold flow [°C]	Consumption [NL/min]
1	-1,5	96
2	-8	159
3	-15	222
4	-21,5	282
5	-24,5	345
6	-26,5	405
7	-28	462

SERIES VR-300U • SINGLE OUTLET
PNEUMATIC COOLERS

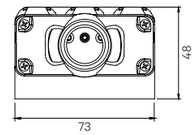

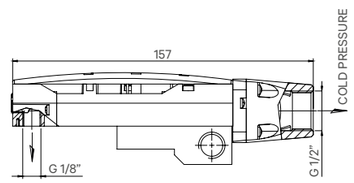

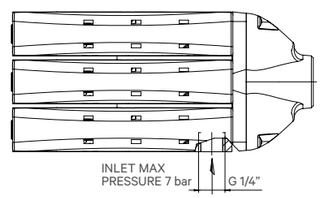

GENERAL FEATURES - VR-300U	
Materials	Body and cover: Nylon 6.6
	Air connections and nozzles: brass
Air inlet port	G-1/4" F
Outlet port (cold flow)	1 x G-1/2" F
Exhaust port (hot flow)	3 x G-1/8" F
Recommended hose	Ø-8x1
Air supply pressure	3 ÷ 7 Bar
Cooling power*	360 W - 300 Kcal/h - 1200 BTUH
Optional magnetic support	KACM-VR300

*with inlet pressure 7 Bar and inlet temperature 20°C

PERFORMANCES AND CONSUMPTION TABLE (with air temperature at inlet 20°C)

Pressure [Bar]	Outlet temperature cold flow [°C]	Consumption [NL/min]
1	-1,5	96
2	-8	159
3	-15	222
4	-21,5	282
5	-24,5	345
6	-26,5	405
7	-28	462

SERIES VR-200U • SINGLE OUTLET
PNEUMATIC COOLERS

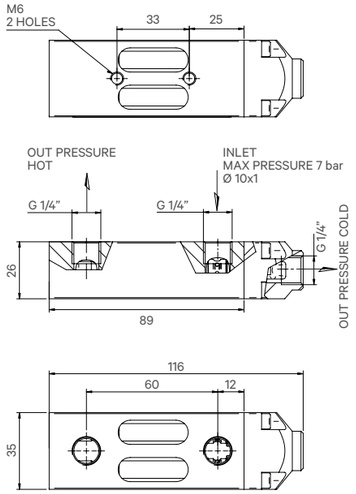

GENERAL FEATURES - VR-200U

Materials	Body and cover: Delrin
	Ports and nozzles: Brass
Air inlet port	G-1/4" F
Outlet port (cold flow)	G-1/4" F
Exhaust port (hot flow)	G-1/4" F
Recommended hose	Ø-8x1
Air supply pressure	Max 7 Bar
Cooling power*	264 W - 220 Kcal/h - 880 BTUH
Optional magnetic support	By means of 2 threads M6 on the body

*with inlet pressure 7 Bar and inlet temperature 20°C

PERFORMANCES AND CONSUMPTION TABLE (with air temperature at inlet 20°C)

Pressure [Bar]	Outlet temperature cold flow [°C]	Consumption [NL/min]
1	-2	64
2	-12	106
3	-18	148
4	-23	188
5	-26	230
6	-28	270
7	-31	308

SERIES VR-400U • SINGLE OUTLET
PNEUMATIC COOLERS

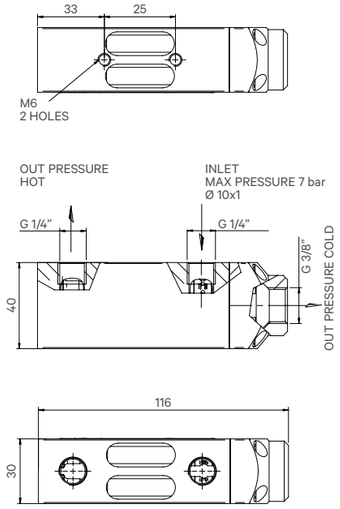

GENERAL FEATURES - VR-400U

Materials	Body and cover: Delrin
	Ports and nozzles: Brass
Air inlet port	G-1/4" F
Exhaust port (hot flow)	G-1/4" F
Recommended hose	Ø-10x1
Supply pressure	Max 7 Bar
Cooling power*	528 W - 440 Kcal/h - 1760 BTUH
Fastening	By means of 2 threads M6 on the body

*with inlet pressure 7 Bar and inlet temperature 20°C

PERFORMANCES AND CONSUMPTION TABLE (with temperature at the inlet 20°C)

Pressure [Bar]	Outlet temperature cold flow [°C]	Consumption [NL/min]
1	-2	128
2	-12	212
3	-18	296
4	-23	376
5	-26	460
6	-28	540
7	-31	616

SERIES VR-400G • SINGLE OUTLET
PNEUMATIC COOLERS

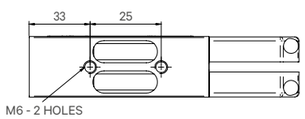

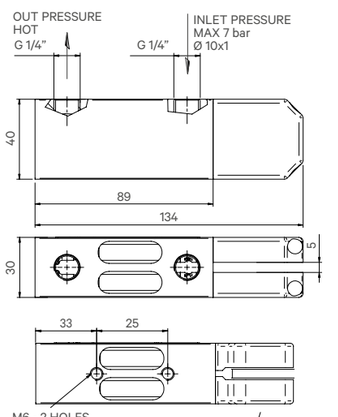

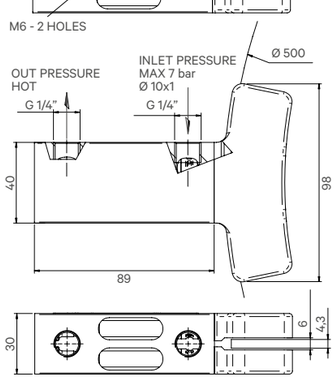

GENERAL FEATURES - VR-400G

Materials	Body: Derlin Clamps: ABS (other materials on request) Inner spindles: brass
Air inlet port	G-1/4" F
Clamps width (cold flow)	5 mm (customised dimensions on request)
Outlet port (hot flow)	G-1/4" F
Recommended hose	Ø-10x1
Air supply pressure	Max 7 Bar
Cooling power*	528 W - 440 Kcal/h - 1760 BTUH
Fastening	By means of two M6 threads on body

*with inlet pressure 7 Bar and inlet temperature 20°C

PERFORMANCES AND CONSUMPTION TABLE (with air temperature at inlet 20°C)

Pressure [Bar]	Outlet temperature cold flow [°C]	Consumption [NL/min]
1	-2	128
2	-12	212
3	-18	296
4	-23	376
5	-26	460
6	-28	540
7	-31	616

SERIES VR-600U
PNEUMATIC COOLERS

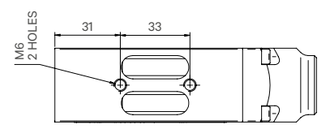

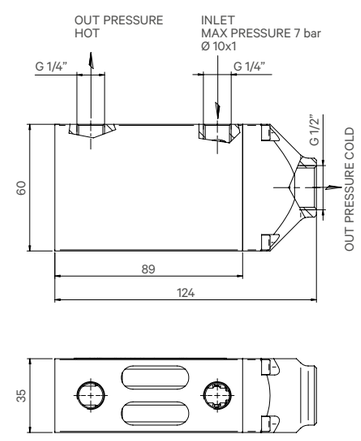

GENERAL FEATURES - VR-600U

Materials	Body: Derlin Ports and nozzles: Brass
Air inlet port	G-1/4" F
Clamps width (cold flow)	G-1/2" F
Outlet port (hot flow)	G-1/4" F
Recommended hose	Ø-10x1
Air supply pressure	Max 7 Bar
Cooling power*	720 W - 600 Kcal/h - 2400 BTUH
Fastening	By means of two M6 threads on body

*with inlet pressure 7 Bar and inlet temperature 20°C

PERFORMANCES AND CONSUMPTION TABLE (with air temperature at inlet 20°C)

Pressure [Bar]	Outlet temperature cold flow [°C]	Consumption [NL/min]
1	-2	192
2	-12	318
3	-18	444
4	-23	564
5	-26	690
6	-28	810
7	-31	924

SERIES VR-600G • TO COOL DOWN BLADES, BELTS, AND BANDS

PNEUMATIC COOLERS

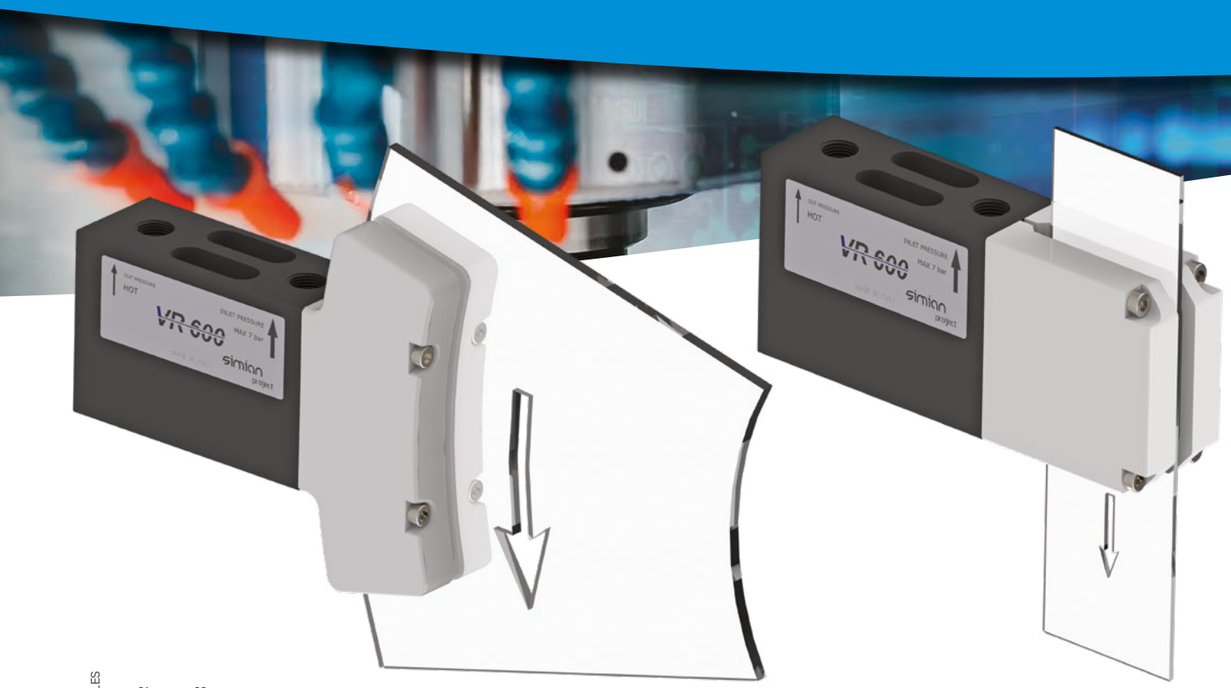

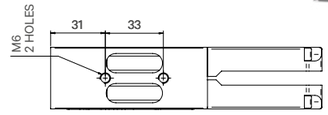

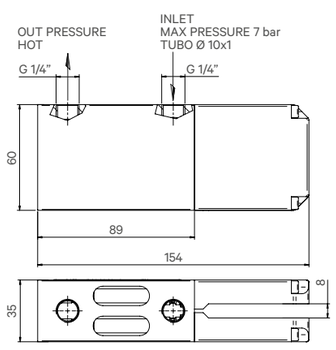

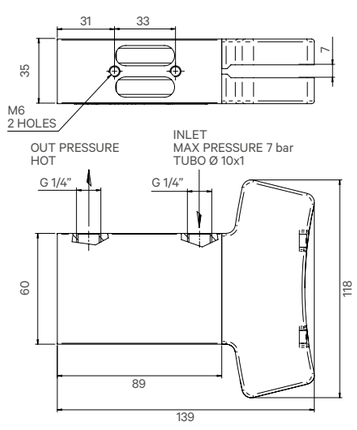

GENERAL FEATURES - VR-600G

Materials	Body: Derlin
	Clamps: ABS (other materials on request)
	Inner spindles: Brass
Air inlet port	G-1/4" F
Clamps width (cold flow)	11 mm (customised dimensions on request)
Outlet port (hot flow)	G-1/4" F
Recommended hose	Ø-10x1
Air supply pressure	Max 7 Bar
Cooling power*	790 W - 660 Kcal/h - 2640 BTUH
Fastening	By means of two M6 threads on body

*with inlet pressure 7 Bar and inlet temperature 20°C

PERFORMANCES AND CONSUMPTION TABLE (with air temperature at inlet 20°C)

Pressure [Bar]	Outlet temperature cold flow [°C]	Consumption [NL/min]
1	-2	192
2	-12	318
3	-18	444
4	-23	564
5	-26	690
6	-28	810
7	-31	924

SERIES VRX-100

PNEUMATIC COOLERS

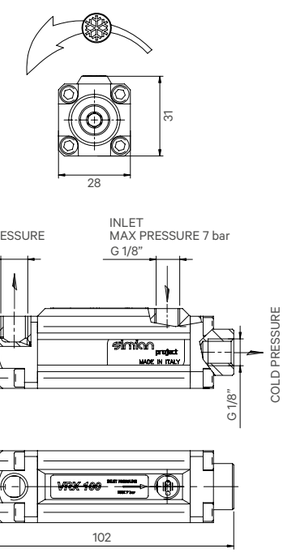

GENERAL FEATURES - VRX-100

Materials	Sleeve: anodized aluminium
	Ends: Delrin 100
Air inlet port	G-1/8" F
Outlet port (cold flow)	G-1/8" F
Exhaust port (hot flow)	G-1/8" F
Recommended hose	Ø-8x1
Air supply pressure	1 ÷ 7 Bar
Cooling power*	132 W - 110 Kcal/h - 440 BTUH
Optional magnetic support	KACM-VRX-100

*with inlet pressure 7 Bar and inlet temperature 20°C

PERFORMANCES AND CONSUMPTION TABLE (with air temperature at inlet 20°C)

Pressure [Bar]	Outlet temperature cold flow [°C]	Consumption [NL/min]
1	-2	32
2	-12	53
3	-18	74
4	-23	94
5	-26	115
6	-28	135
7	-31	154

SERIES VRX-300
PNEUMATIC COOLERS

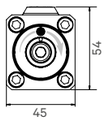

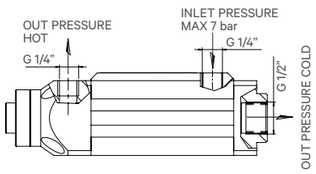

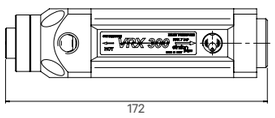

GENERAL FEATURES - VRX-300

Materials	Sleeve: anodized aluminium
	Ends: Delrin100
Air inlet port	G-1/4" F
Outlet port (cold flow)	G-1/2" F
Exhaust port (hot flow)	G-1/4" F
Recommended hose	Ø-10x1
Air supply pressure	5 ÷ 7 Bar
Cooling power*	600 W - 523 Kcal/h - 2075 BTUH
Optional magnetic support	KACM-VRX500

*with inlet pressure 7 Bar and inlet temperature 20°C

PERFORMANCES AND CONSUMPTION TABLE (with air temperature at inlet 20°C)

Pressure [Bar]	Outlet temperature cold flow [°C]	Consumption [NL/min]
5	-16	525
6	-17	650
7	-19	750

SERIES VRX-500
PNEUMATIC COOLERS

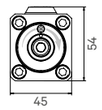

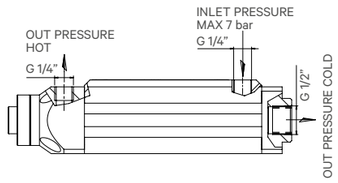

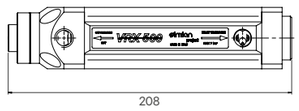

GENERAL FEATURES - VRX-500

Materials	Sleeve: anodized aluminium
	Testate: Delrin100
Air inlet port	G-1/4" F
Outlet port (cold flow)	G-1/2" F
Exhaust port (hot flow)	G-1/4" F
Recommended hose	Ø-10x1
Air supply pressure	5 ÷ 7 Bar
Cooling power*	730 W - 630 Kcal/h - 2500 BTUH
Optional magnetic support	KACM-VRX500

*with inlet pressure 7 Bar and inlet temperature 20°C

PERFORMANCES AND CONSUMPTION TABLE (with air temperaturt 20°C)

Pressure [Bar]	Outlet temperature cold flow [°C]	Consumption [NL/min]
5	-16	633
6	-17	783
7	-19	900

SERIES VRX-1000
PNEUMATIC COOLERS

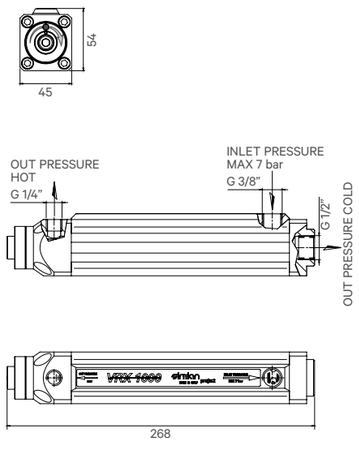

GENERAL FEATURES - VRX-1000	
Materials	Sleeve: anodized aluminium
	Ends: Delrin100
Air inlet port	G-3/8" F
Outlet port (cold flow)	G-1/2" F
Exhaust port (hot flow)	G-1/4" F
Recommended hose	Ø-12x1
Air supply pressure	5 ÷ 7 Bar
Cooling power*	1650 W - 1417 Kcal/h - 5600 BTUH
Optional magnetic support	KACM-VRX1000

*with inlet pressure 7 Bar and inlet temperature 20°C

PERFORMANCES AND CONSUMPTION TABLE (with air temperature at inlet 20°C)

Pressure [Bar]	Outlet temperature cold flow [°C]	Consumption [NL/min]
5	-16	1424
6	-17	1760
7	-19	2025

ACCESSORIES
PNEUMATIC COOLERS

MAGNETIC SUPPORT	
Part-number	Cooler
KACM-VR100	VR100
KACM-VR200	VR200
KACM-VR300	VR300
KACM-VRX100	VRX100
KACM-VRX300 / VRX500	VRX300 / VRX500
KACM-VRX1000	VRX1000

ADJUSTABLE NOZZLE (INSULATED VERSION) FOR COLD OUTLET

Part-number	Port	Nozzle	No. modules	Length
AC28	1/8"	Ø-3	4	100
AC34	1/4"	Ø-3	4	100
AC47	3/8"	Ø-6	6	180
AC27	1/2"	Ø-6	6	180

ADJUSTABLE NOZZLE (NON-INSULATED VERSION) FOR COLD OUTLET

82021/8 1/8-3	1/8"	Ø-3	8	155
84041/6 1/2-9	1/2"	Ø-9	6	170

Other configurations available on request

STRAIGHT PUSH-IN FITTING FOR AIR SUPPLY

Part-number	Size	Cooler
6512	8-1/8	VR-100/200/300; VRX-100
6512	10-1/4	VRX-300/500
6512	12-1/4	VRX-1000
6512	10-3/8	VR-600

Other configurations available on request

ELBOW PUSH-IN FITTING FOR AIR SUPPLY

Part-number	Size	Cooler
6522	8-1/8	VR-100/200/300; VRX-100
6522	10-1/4	VRX-300/500
6522	12-1/4	VRX-1000
6512	10-3/8	VR-600

Male parallel with O-Ring

SILENCER FOR HOT FLOW EXHAUST

Part-number	Size	Noise at 6 bar [db(A)]
SC 1/8	1/8"	70
SC 1/4	1/4"	67
SC 3/8	3/8"	67

Swivel male, parallel with O-Ring

SILENCER FOR COLD FLOW OUTLET (ITEM FOR VRX-300/VRX-500)

Part-number	Size
AC25	1/2"

CONTROL UNITS - XTRONIC C-EV-1S/C-2EV-1S

1 - 2 SOLENOID VALVES

CONTROL UNIT XTRONIC C-EV-1S/C-2EV-1S
1 SOLENOID VALVE

CONTROL UNIT XTRONIC C-EV-1S/C-2EV-1S
2 SOLENOID VALVES

DESCRIPTION

Control box featuring:

1. Switch for automatic/manual operation
2. Solenoid valve
3. Electronic kit with 7-segment display
4. Temperature probe and safety fuses. High-temperature kit available on request

GENERAL FEATURES - XTRONIC C-EV-1S	
Supply voltage	220V AC
Recommended hose	Ø-10x1
Supply pressure	Max 7 Bar
Probe length	1 m

GENERAL FEATURES - XTRONIC C-2EV-1S	
Supply voltage	220V AC
Recommended hose	Ø-10x1
Supply voltage	Max 7 Bar
Probe length	1 m

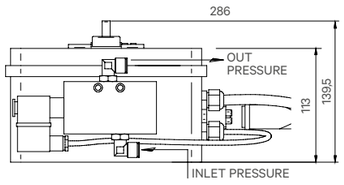

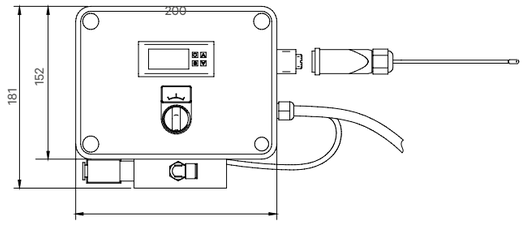

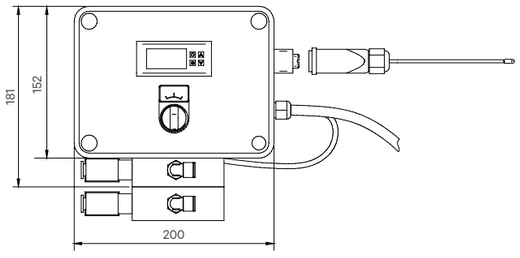

CONTROL UNITS - XTRONIC 345 B

PNEUMATIC COOLERS

GENERAL FEATURES - XTRONIC 345 B	
Supply voltage	24V DC
Probe length	1 m
Temperature	Range -20°C +60°C
Humidity	Range 00% 100% RH
Accuracy	0.1°C , 0.1 % RH
Current capacity	Max 10 A
Coil voltage and power	24 V - 3.1 W
Electric wires' section	0.75 mm

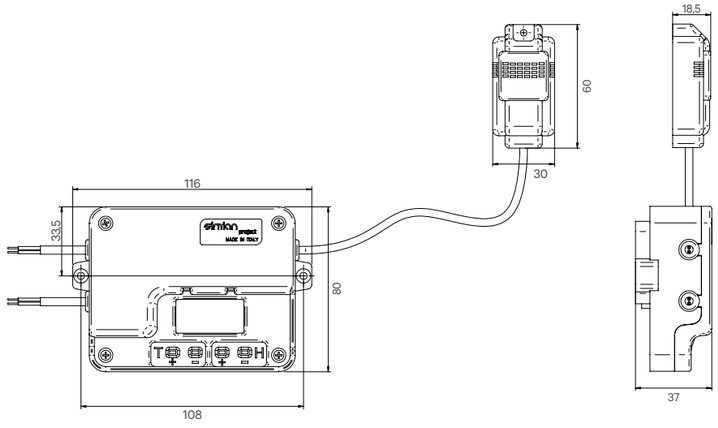

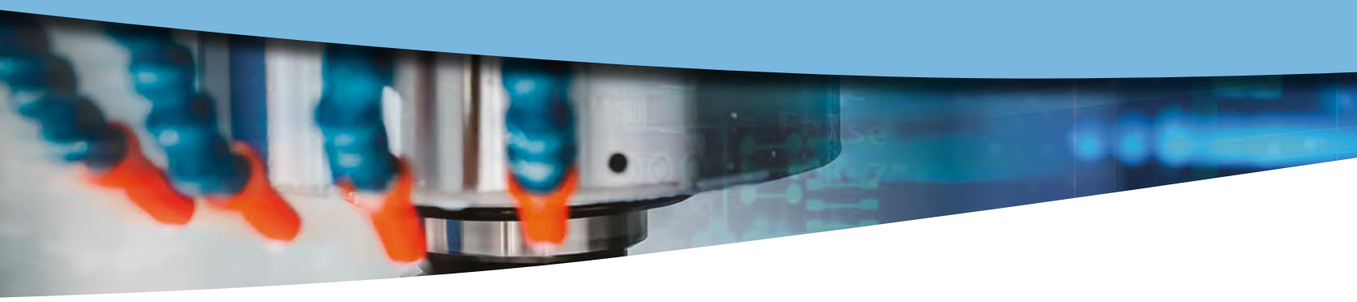

STAND-ALONE SERIES

Pneumatic coolers with integrated temperature-control function, in a single unit!

These compact devices enable big savings of compressed air (and, therefore, of energy). Actually, they make it possible to choose and set the temperature range in which the cooler will work. This way, the device will generate cold air only when this is required, and will maintain the refrigeration.

Moreover, this system is “plug-and-play”: it is enough to connect the pneumatic hoses and the electric wires and the device is ready to function!

These units are available also for remote control of coolers. Customised versions can be supplied as well.

AIREKA

STAND-ALONE SERIES VRX-100 XTRONIC

PNEUMATIC COOLERS

GENERAL FEATURES - VRX-100 XTRONIC	
Supply voltage	24V DC
Recommended hose	Ø-8x1
Supply pressure	Max 7 Bar
Cooling power and performances	Please refer to VRX-100’s (page 21)
Probe length	1 m
Temperature range	-20°C +60°C
Humidity range	00% 100% RH
Accuracy	0.1°C , 0.1 % RH
Current capacity	Max 10 A
Coil voltage and power	24 V - 3.1 W
Electric wires’ section	0.75 mm

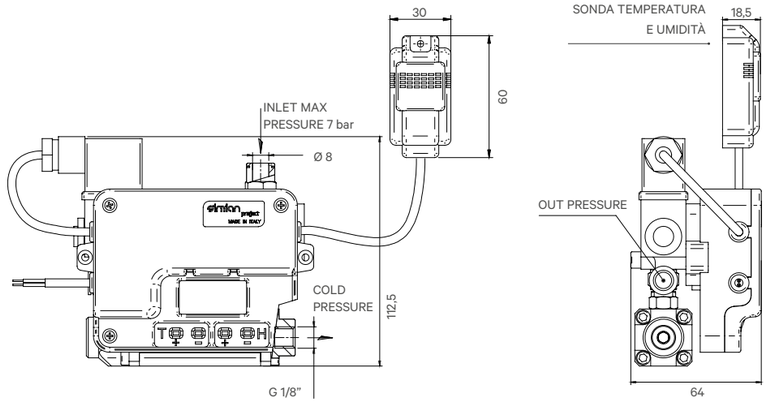

STAND-ALONE SERIES VR-200U XTRONIC

PNEUMATIC COOLERS

GENERAL FEATURES - VR-200U XTRONIC	
Supply voltage	24V DC
Recommended hose	Ø-8x1
Supply pressure	Max 7 Bar
Cooling power and performances	Please refer to VR-200U's (page 21)
Probe length	1 m
Temperature range	-20°C +60°C
Humidity range	00% 100% RH
Accuracy	0.1°C , 0.1 % RH
Current capacity	Max 10 A
Coil voltage and power	24 V - 3.1 W
Electric wires' section	0.75 mm

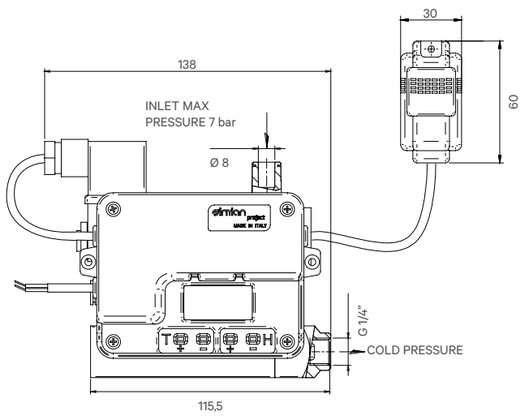

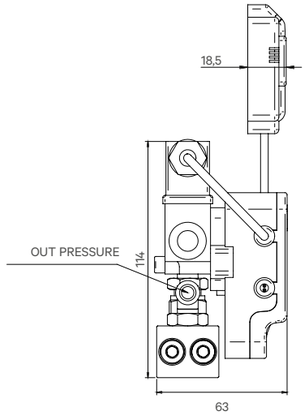

STAND-ALONE SERIES VRX-300 XTRONIC

PNEUMATIC COOLERS

GENERAL FEATURES - VRX-300 XTRONIC	
Supply voltage	24V DC
Recommended hose	Ø-10x1
Supply pressure	Max 7 Bar
Cooling power and performances	Please refer to VRX-300's (page 22)
Probe length	1 m
Temperature range	-20°C +60°C
Humidity range	00% 100% RH
Accuracy	0.1°C , 0.1 % RH
Current capacity	Max 10 A
Coil voltage and power	24 V - 3.1 W
Electric wires' section	0.75 mm

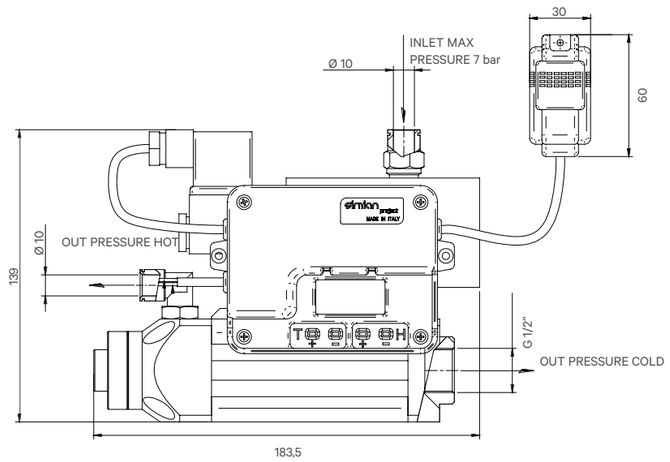

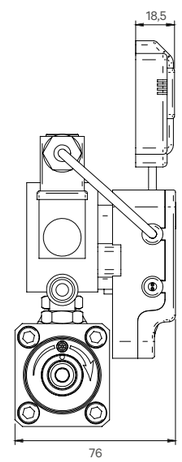

STAND-ALONE SERIES VRX-500 XTRONIC

PNEUMATIC COOLERS

GENERAL FEATURES - VR-500 XTRONIC	
Supply voltage	24V DC
Recommended hose	Ø-10x1
Supply pressure	Max 7 Bar
Cooling power and performances	Please refer to VRX-500's (page 23)
Probe length	1 m
Temperature range	-20°C +60°C
Humidity range	00% 100% RH
Accuracy	0.1°C , 0.1 % RH
Current capacity	Max 10 A
Coil voltage and power	24 V - 3.1 W
Electric wires' section	0.75 mm

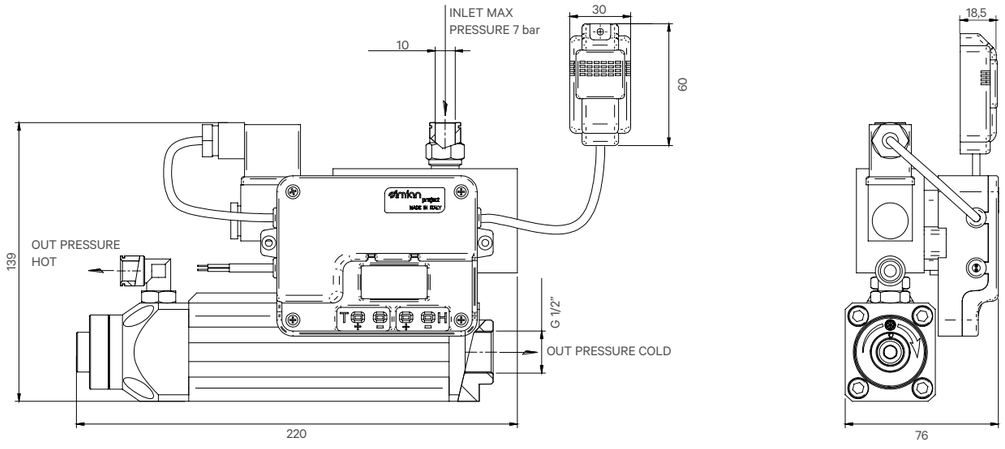

STAND-ALONE SERIES VRX-1000 XTRONIC

PNEUMATIC COOLERS

GENERAL FEATURES - VRX-1000 XTRONIC	
Supply voltage	24V DC
Recommended hose	Ø-12x1
Supply pressure	Max 7 Bar
Cooling power and performances	Please refer to VRX-1000's (page 24)
Probe length	1 m
Temperature range	-20°C +60°C
Humidity range	00% 100% RH
Accuracy	0.1°C , 0.1 % RH
Current capacity	Max 10 A
Coil voltage and power	24 V - 3.1 W
Electric wires' section	0.75 mm

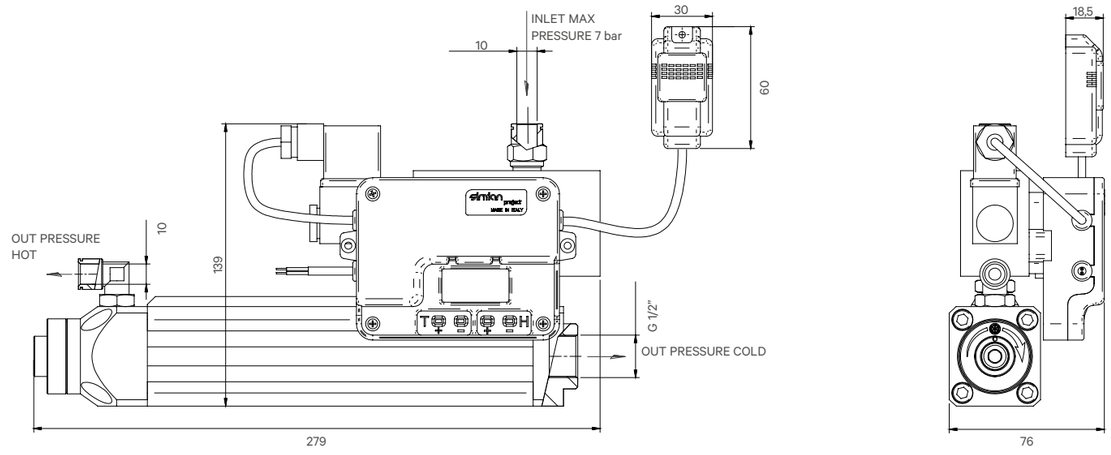

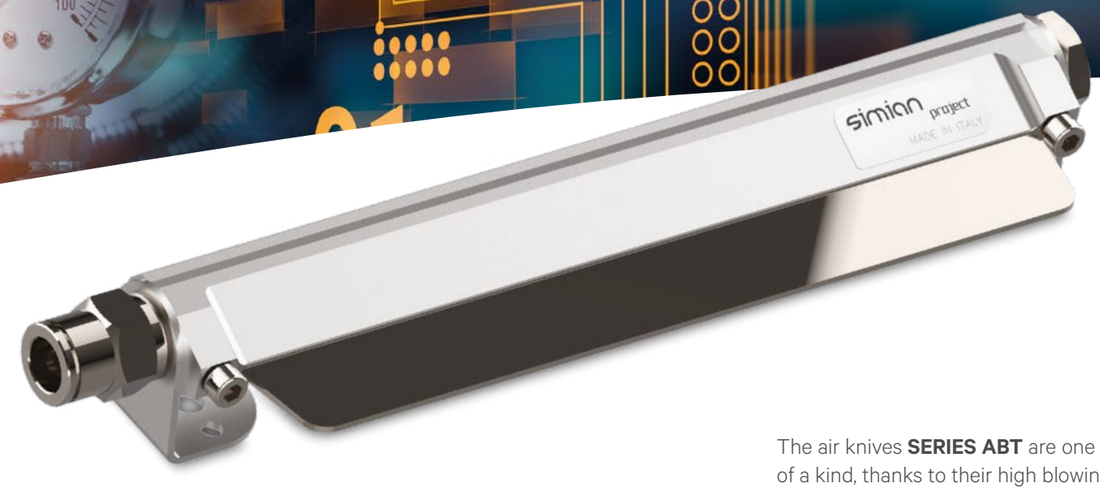

Series ABT / ABX / ABZ

Modular air knives,
for unbeatable flow power

The air knives **SERIES ABT** are one of a kind, thanks to their high blowing power, which is a result of the air flow on both sides of the blade, and thanks to their easy installation, by means of two neodymium magnets and of brackets, which make it possible to direct the knife according to all demands. These products are very effective for cleaning, drying, and cooling.

- Design geometries optimised to maximise the Coanda effect
- Double blow-off flow (both sides of the blade)
- Powerful, uniform flow, suitable for cleaning small and large surfaces
- Modular design and possibility of customisation
- No moving parts, so maintenance-free

AIREKA

COANDA EFFECT

DESCRIPTION OF THE COANDA EFFECT

The air amplifiers and the air knives exploit the Coanda effect.

This phenomenon can be explained as the tendency of a fluid to follow the contour of a surface nearby. It is named after the pioner of aerodynamics Henri Coanda, who in 1936 patented some instruments that exploited the capacity to deviate a flow.

The compressed air introduced in an amplifier or in an air knife is forced to pass through a reduced section, from 0.02 mm to 0.08 mm, and, by lapping the surface nearby, the surrounding air is attracted towards the flow's direction, so that the volume of air becomes from 5 to 20 times bigger than it was at the inlet.

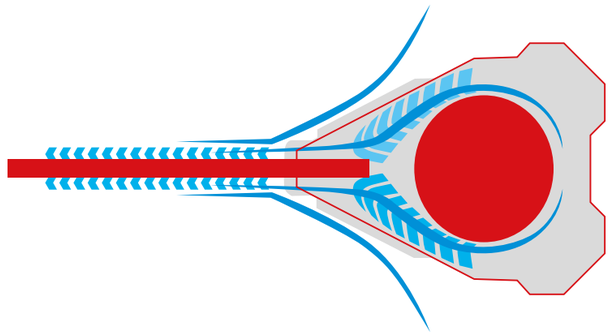

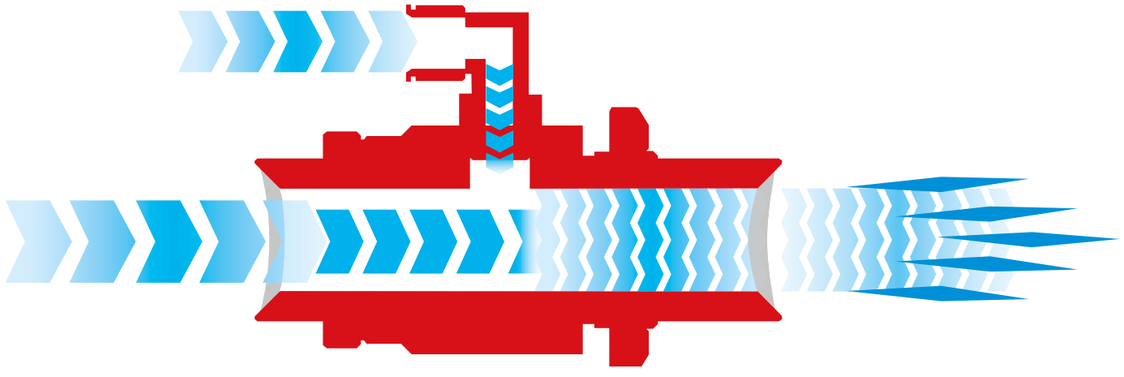

SERIES ABT-030

DOUBLE-SLOT AIR KNIVES

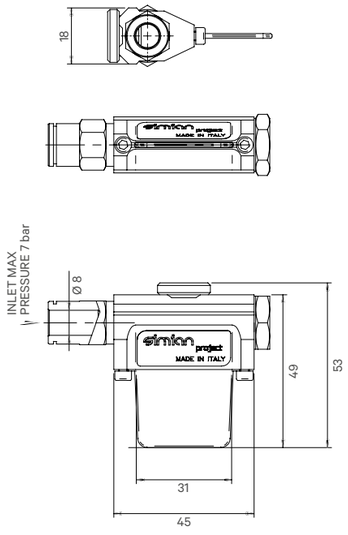

GENERAL FEATURES - ABT-030	
Materials	Anodized aluminium
Air supply port	Fitting Ø-8
Fastening	Optional angular bracket
Blade length	32 mm
Slots' size	0,15 mm on each side
Air supply pressure	Max 1-7 Bar
Optional magnetic support	KACM-ABT030

PERFORMANCES AND CONSUMPTION TABLE

Pressure [Bar]	CONSUMPTION [Nl/min]	THRUST [at 200 mm in g]
1	142	61
2	250	123
3	352	200
4	442	280
5	508	355
6	612	445
7	710	550

SERIES ABT-030 PLUS

DOUBLE-SLOT AIR KNIVES

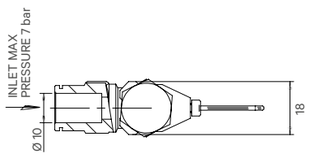

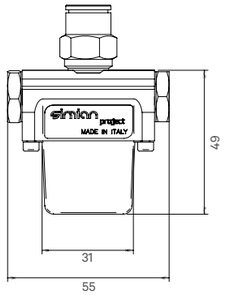

GENERAL FEATURES - ABT-030 PLUS

Materials	Anodized aluminium
Air supply port	Fitting Ø-10
Fastening	Optional angular bracket
Blade length	32 mm
Slots' size	0,15 mm on each side
Air supply pressure	Max 1-7 Bar
Optional magnetic support	KACM-ABT030

PERFORMANCES AND CONSUMPTION TABLE

Pressure [Bar]	CONSUMPTION [Nl/min]	THRUST [at 200 mm in g]
1	213	90
2	375	190
3	528	300
4	663	420
5	762	532
6	918	668
7	1070	830

Size of double slot: 0,15 mm

SERIES ABT-060

DOUBLE-SLOT AIR KNIVES

GENERAL FEATURES - ABT-060

Materials	Anodized aluminium
Air supply port	Fitting Ø-10
Fastening	Optional angular bracket
Blade length	76 mm
Slots' size	0,15 mm on each side
Air supply pressure	Max 1-7 Bar
Optional magnetic support	KACM-ABT030

PERFORMANCES AND CONSUMPTION TABLE

Pressure [Bar]	CONSUMPTION [Nl/min]	THRUST [at 200 mm in g]
1	426	126
2	750	266
3	1056	420
4	1326	588
5	1524	745
6	1836	935
7	2140	1162

Size of double slot: 0,15 mm

SERIES ABT-100
DOUBLE-SLOT AIR KNIVES

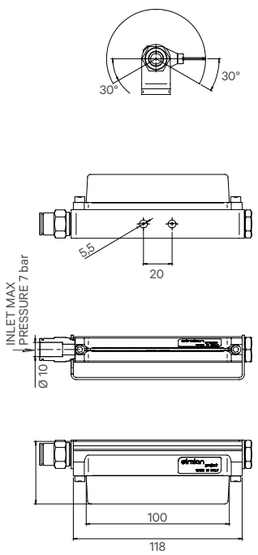

GENERAL FEATURES - ABT-100	
Materials	Anodized aluminium
Air supply port	Fitting Ø-10
Fastening	Integrated feet
Blade length	100 mm
Slots' size	0,05 mm on each side
Air supply pressure	Max 1-7 Bar
Optional magnetic support	KACM-ABT100

PERFORMANCES AND CONSUMPTION TABLE

Pressure [Bar]	CONSUMPTION [Nl/min]	THRUST [at 200 mm in g]
1	372	190
2	550	350
3	754	553
4	945	750
5	1135	940
6	1325	1120
7	1515	1290

SERIES ABT-200 • MODULARITY AND CUSTOMISATION
DOUBLE-SLOT AIR KNIVES

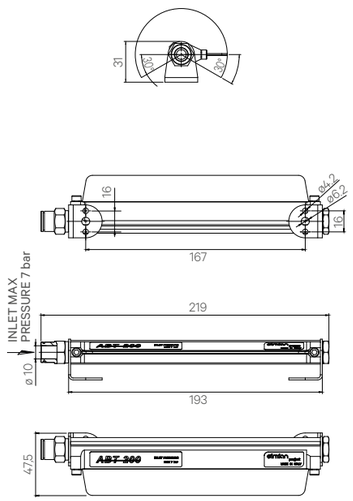

GENERAL FEATURES - ABT-200	
Materials	Anodized aluminium
Air supply port	Fitting Ø-10
Fastening	Integrated feet
Blade length	170 mm
Slots' size	0,05 mm on each side
Air supply pressure	Max 1-7 Bar
Optional magnetic support	KACM-ABT200

PERFORMANCES AND CONSUMPTION TABLE

Pressure [Bar]	CONSUMPTION [Nl/min]	THRUST [at 200 mm in g]
1	765	42
2	978	238
3	1360	595
4	1573	722
5	1955	1105
6	2380	1490
7	2663	1900

SERIES ABT-400

DOUBLE-SLOT AIR KNIVES

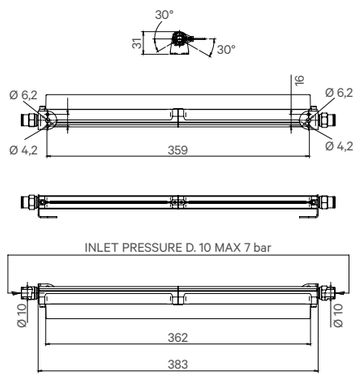

GENERAL FEATURES - ABT-400	
Materials	Anodized aluminium
Air supply port	Fitting Ø-10
Fastening	Integrated feet
Blade length	362 mm
Slots' size	0,05 mm on each side
Air supply pressure	Max 7 Bar
Optional magnetic support	KACM-ABT200

PERFORMANCES AND CONSUMPTION TABLE

Pressure [Bar]	CONSUMPTION [Nl/min]
1	1530
2	1956
3	2720
4	3146
5	3910
6	4760
7	5326

SERIES ABT-600

DOUBLE-SLOT AIR KNIVES

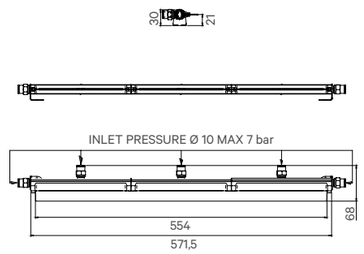

GENERAL FEATURES - ABT-600	
Materials	Anodized aluminium
Air supply port	Fitting Ø-10
Fastening	Integrated feet
Blade length	554 mm
Slots' size	0,05 mm on each side
Air supply pressure	Max 7 Bar
Optional magnetic support	KACM-ABT200

PERFORMANCES AND CONSUMPTION TABLE

Pressure [Bar]	CONSUMPTION [Nl/min]
1	2295
2	2934
3	4080
4	4719
5	5865
6	7140
7	7989

ACCESSORIES - SPECIAL VERSIONS

AIR KNIVES

MAGNETIC SUPPORT	
Part-number	Cooler
KACM-ABT030	ABT-030
KACM-ABT200	ABT-200

FIXATION BRACKET	
Part-number	Cooler
ABT-05	ABT-030

CUSTOMISED VERSIONS

On request we are able to supply customised versions (shape, materials, etc.)

SERIES ABT-F1

AIR KNIVES WITH CALIBRATED OR ADJUSTABLE SINGLE SLOT

GENERAL FEATURES - ABT-F1	
Materials	Anodized aluminium
Air supply port	Fitting Ø-10
Fastening	Integrated feet
Blade length	On request
Air supply pressure	Max 7 Bar
Optional magnetic support	KACM-ABT200

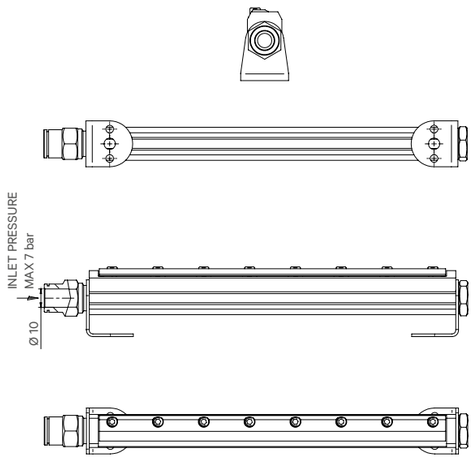

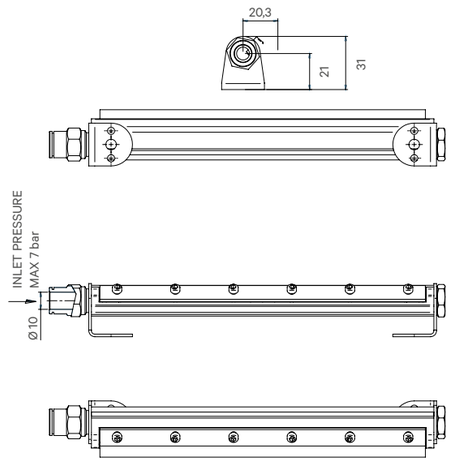

SERIES ABX-1000

LARGE AIR KNIVES IN ALUMINIUM

GENERAL FEATURES - ABX-1000	
Materials	Anodised aluminium / Stainless steel
Fixation	On request
Blade length	1000 mm
Supply pressure	Based on the type of air supply

On request: heated air flow;
supply connection at 90°.

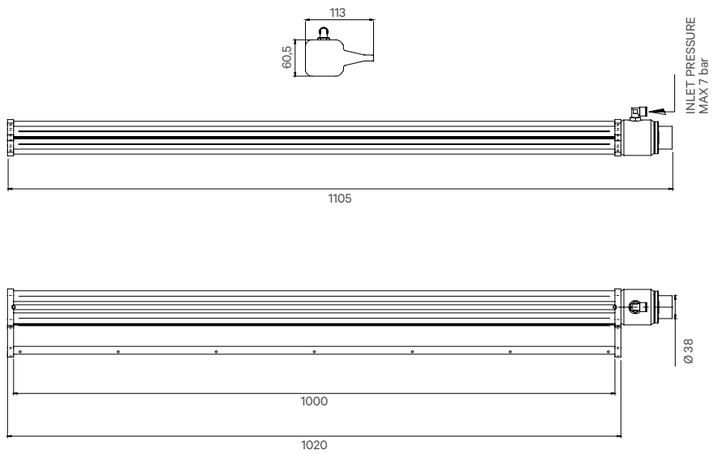

SERIES ABX-1500

LARGE AIR KNIVES IN ALUMINIUM

GENERAL FEATURES - ABX-1500	
Materials	Anodised aluminium / Stainless steel
Fixation	On request
Blade length	1500 mm
Supply pressure	Based on the type of air supply

On request: heated air flow;
supply connection at 90°

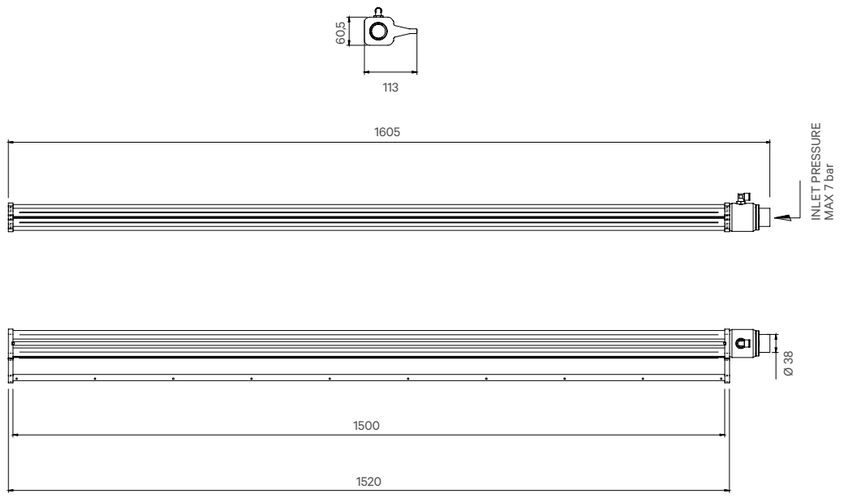

SERIES ABX-2000

LARGE AIR KNIVES IN ALUMINIUM

GENERAL FEATURES - ABX-2000	
Materials	Anodised aluminium / Stainless steel
Fixation	On request
Blade length	2000 mm
Supply pressure	Based on the type of air supply

On request: heated air flow;
supply connection at 90°

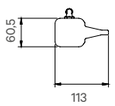

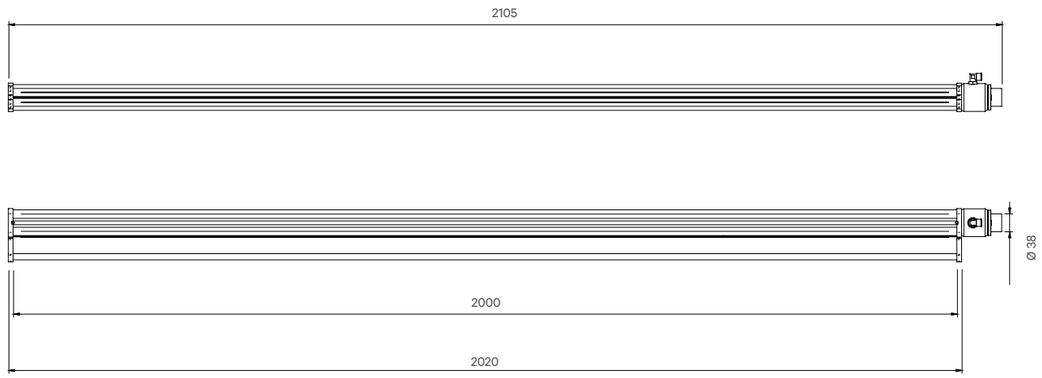

SERIES ABZ-1000

LARGE AIR KNIVES MADE OF STAINLESS STEEL SHEETS

GENERAL FEATURES - ABZ-1000	
Materials	Stainless steel
Fixation	On request
Blade length	1000 mm
Supply pressure	Based on the type of air supply

On request: heated air flow.

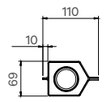

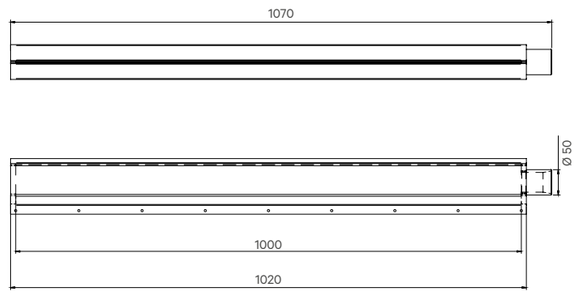

SERIES ABZ-1500

LARGE AIR KNIVES MADE OF STAINLESS STEEL SHEETS

GENERAL FEATURES - **ABZ-1500**	
Materials	Stainless steel
Fixation	On request
Blade length	1500 mm
Supply pressure	Based on the type of air supply

On request: heated air flow

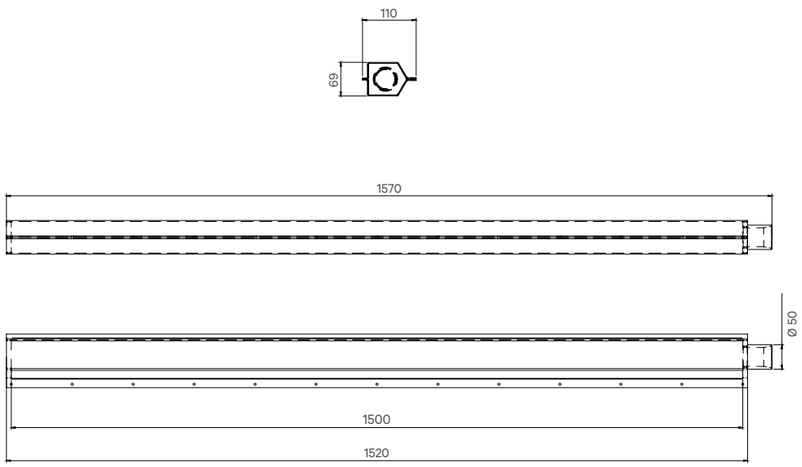

SERIES ABZ-2000

LARGE AIR KNIVES MADE OF STAINLESS STEEL SHEETS

GENERAL FEATURES - **ABZ-2000**	
Materials	Stainless steel
Fixation	On request
Blade length	2000 mm
Supply pressure	Based on the type of air supply

On request: heated air flow

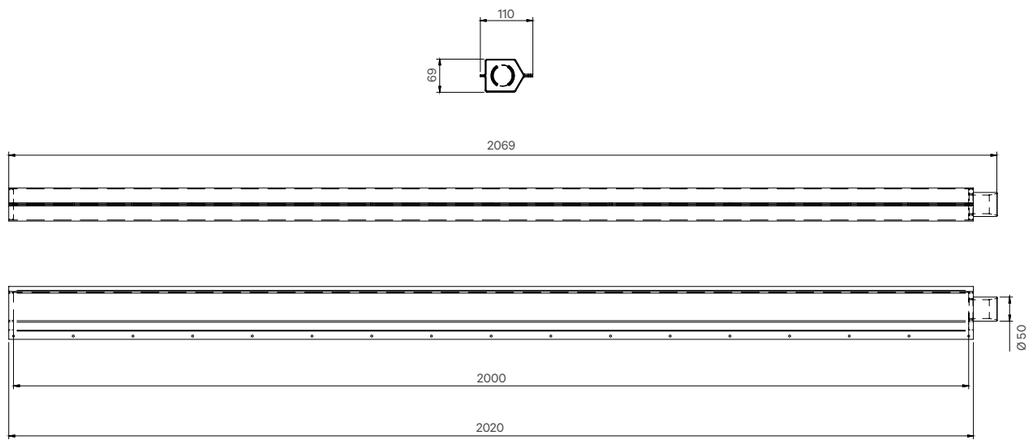

Series AM / UGR

Powerful, adjustable,
and connectable to pneumatic
coolers (patented system)

The **AM Series** air amplifiers offer excellent performance for both suction and blow-off. The quality of design and construction optimises the Coanda effect, so they use a small amount of compressed air to generate a powerful, high-speed flow.
Their capability to perform both functions of suction and blow-off make them useful for many applications, including ventilating electric cabinets, conveying fumes and lightweight particles produced by machining, conveying and handling of light parts, drying, and cooling. When combined with the VR Series coolers, they create an effective patented system where, by conveying the hot air flow exhausted by the cooler to actuate an AM Series amplifier, the cooling power is optimised, so that to make it possible to drawn hot air out of enclosures and ventilate closed areas to be cooled.
The flow-rate can be adjusted by simply turning the nut.

- Design geometries optimised to maximise the Coanda effect
- Adjustable flow-rate
- Wide section for suction and blow-off, suitable for a variety of applications
- Instant operation
- No moving part, so not subject to wear and tear
- No electricity or chemical substances required
- More efficient than venturis and ejectors
- It does not cause neither sparks nor interferences
- Reliable and maintenance-free

AIREKA

SERIES AM-10T
AIR AMPLIFIERS

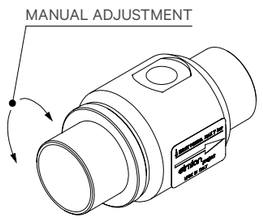

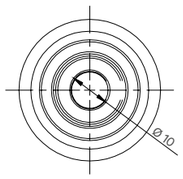

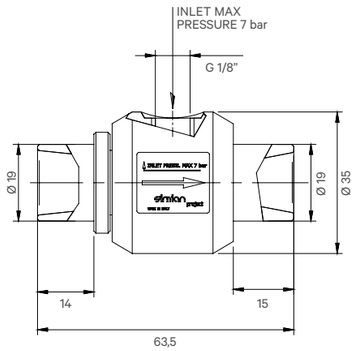

GENERAL FEATURES - AM-10T

Materials	Aluminium
Air inlet port	G-1/8" F
Inlet diameter	Ø-19
Outlet diameter	Ø-19
Air supply pressure	Max. 7 Bar
Recommended hose	Ø-6x1 - Ø-8x1

PERFORMANCES AND CONSUMPTION TABLE

SUPPLY PRESSURE (BAR)	OPENING ADJUSTMENT	VACUUM AT INLET [m Bar]	FLOW-RATE (Stm³/h)	FLOW-RATE [l/min]	AIR CONSUMPTION [l/min]	AMPLIFICATION RATIO
2	MIN	-80	33,5	558.3	78,3	7,1
	INTERMEDIATE	-91,5	46	766.7	158,3	4,8
	MAX	-98	46	766.7	220,0	3,5
3	MIN	-120	38	633.3	110,0	5,8
	INTERMEDIATE	-139	48	800.0	220,0	3,6
	MAX	-156	50	833.3	305,0	2,7
4	MIN	-160	42	700.0	138,3	5,1
	INTERMEDIATE	-180	50	833.3	283,3	2,9
	MAX	-194	52	866.7	383,3	2,3
5	MIN	-187	46	766.7	163,3	4,7
	INTERMEDIATE	-219	52	866.7	343,3	2,5
	MAX	-333	56	933.3	461,7	2,0
6	MIN	-224	47	783.3	191,7	4,1
	INTERMEDIATE	-249	56	933.3	403,3	2,3
	MAX	-360	60	1000.0	543,3	1,8
7	MIN	-256	49	816.7	223,3	3,7
	INTERMEDIATE	-345	58	966.7	456,7	2,1
	MAX	-377	65	1083.3	620,0	1,7

SERIES AM-15T
AIR AMPLIFIERS

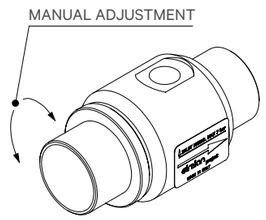

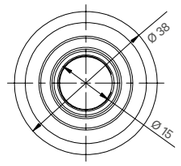

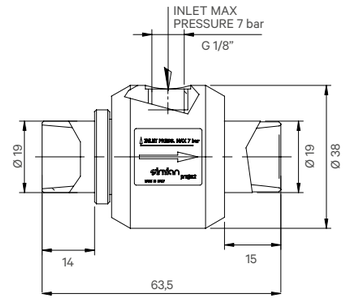

GENERAL FEATURES - AM-15T

Materials	Aluminium
Air inlet port	G-1/8" F
Inlet diameter	Ø-19
Outlet diameter	Ø-19
Air supply pressure	Max. 7 Bar
Recommended hose	Ø-8x1 - Ø-10x1

PERFORMANCES AND CONSUMPTION TABLE

SUPPLY PRESSURE (BAR)	OPENING ADJUSTMENT	VACUUM AT INLET [m Bar]	FLOW-RATE (Stm³/h)	FLOW-RATE [l/min]	AIR CONSUMPTION [l/min]	AMPLIFICATION RATIO
2	MIN	-49.0	53	883.3	105	8,4
	INTERMEDIATE	-65.0	76	1200.7	221	5,7
	MAX	-71	73	1216.7	377	3,2
3	MIN	-75.0	66,5	1108.3	155	7,2
	INTERMEDIATE	-99.0	91	1516.7	318	4,8
	MAX	-112	93	1550.0	502	3,1
4	MIN	-101.5	77	1283.3	211	6,1
	INTERMEDIATE	-129.5	104	1733.3	466	3,7
	MAX	-144	106	1766.7	633	2,8
5	MIN	-121.0	86	1433.3	244	5,9
	INTERMEDIATE	-173.5	116	1933.3	563	3,4
	MAX	-255	126	2091.7	764	2,7
6	MIN	-145.0	94	1558.3	304	5,1
	INTERMEDIATE	-193.5	133	2216.7	676	3,3
	MAX	-251	135	2250.0	863	2,6
7	MIN	-167.5	101	1675.0	370	4,5
	INTERMEDIATE	-246.0	149	2483.3	770	3,2
	MAX	-274	153	2541.7	977	2,6

SERIES AM-20T

AIR AMPLIFIERS

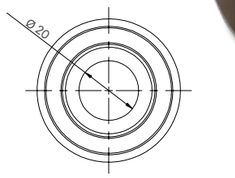

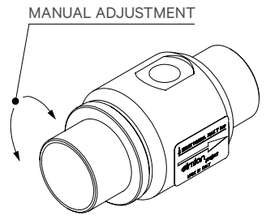

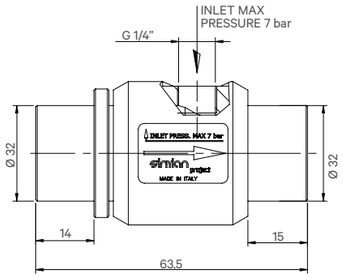

GENERAL FEATURES - **AM-20T**	
Materials	Aluminium
Air inlet port	G-1/4" F
Inlet diameter	Ø-32
Outlet diameter	Ø-32
Air supply pressure	Max. 7 Bar
Recommended hose	Ø-8x1 - Ø-10x1

PERFORMANCES AND CONSUMPTION TABLE

SUPPLY PRESSURE (BAR)	OPENING ADJUSTMENT	VACUUM AT INLET [m Bar]	FLOW-RATE (Stm³/h)	FLOW-RATE [l/min]	AIR CONSUMPTION [l/min]	AMPLIFICATION RATIO
1	MIN	-8,5	32	533.3	58,3	9,1
	INTERMEDIATE	-17	60	1000.0	116,7	8,6
	MAX	-14	50	833.3	333,3	2,5
2	MIN	-18	72	1200.0	125,0	9,6
	INTERMEDIATE	-39	106	1766.7	283,3	6,2
	MAX	-44	100	1666.7	533,3	3,1
3	MIN	-30	95	1583.3	200,0	7,9
	INTERMEDIATE	-59	134	2233.3	416,7	5,4
	MAX	-68	136	2266.7	700,0	3,2
4	MIN	-43	112	1866.7	283,3	6,6
	INTERMEDIATE	-79	158	2633.3	650,0	4,1
	MAX	-93	160	2666.7	883,3	3,0
5	MIN	-55	126	2100.0	325,0	6,5
	INTERMEDIATE	-128	180	3000.0	783,3	3,8
	MAX	-177	195	3250.0	1066,7	3,0
6	MIN	-66	140	2333.3	416,7	5,6
	INTERMEDIATE	-138	210	3500.0	950,0	3,7
	MAX	-141	210	3500.0	1183,3	3,0
7	MIN	-79	152	2533.3	516,7	4,9
	INTERMEDIATE	-147	240	4000.0	1083,3	3,7
	MAX	-171	240	4000.0	1333,3	3,0

SERIES AM-25T

AIR AMPLIFIERS

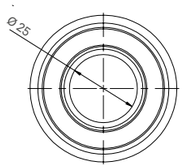

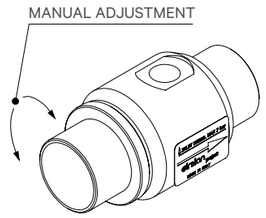

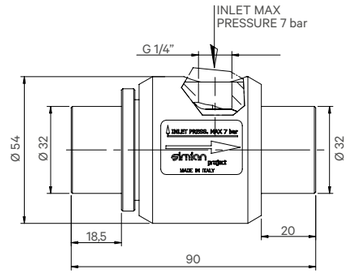

GENERAL FEATURES - **AM-25T**	
Materials	Aluminium
Air inlet port	G-1/4
Inlet diameter	Ø-32
Outlet diameter	Ø-32
Air supply pressure	Max. 7 Bar
Recommended hose	Ø-10x1 - Ø-12x1

PERFORMANCES AND CONSUMPTION TABLE

SUPPLY PRESSURE (BAR)	OPENING ADJUSTMENT	VACUUM AT INLET [m Bar]	FLOW-RATE (Stm³/h)	FLOW-RATE [l/min]	AIR CONSUMPTION [l/min]	AMPLIFICATION RATIO
1	MIN	-7.0	84	1400.0	170,7	8,2
	INTERMEDIATE	-16,0	166	2766.7	342,0	8,1
	MAX	-12	112	1866.7	650,0	2,9
2	MIN	-16.5	148	2400.7	296,0	8,3
	INTERMEDIATE	-37.0	249	4150.0	608,0	6,8
	MAX	-42	193	3208.3	1058,0	3,0
3	MIN	-60.0	213	3541.7	450,0	7,9
	INTERMEDIATE	-659.5	319	5316.7	908,0	5,9
	MAX	-67	283	4708.3	1541,0	3,1
4	MIN	-41.5	245	4083.3	671,7	6,1
	INTERMEDIATE	-74.5	331	5516.7	1375,0	4,0
	MAX	-87	346	5758.3	1917,0	3,0
5	MIN	-52.5	288	4800.0	787,5	6,1
	INTERMEDIATE	-124.0	390	6500.0	1641,7	4,0
	MAX	-144	413	6875.0	2283,0	3,0
6	MIN	-63.0	313	5208.3	1017,0	5,1
	INTERMEDIATE	-134.0	396	6600.0	2091,5	3,2
	MAX	-138	468	7800.0	2608,0	3,0
7	MIN	-704.5	366	6100.0	1225,0	5,0
	INTERMEDIATE	-143.5	468	7800.0	2475,0	3,2
	MAX	-151	555	9250.0	3083,0	3,0

SERIES AM-30T
AIR AMPLIFIERS

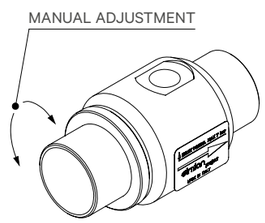

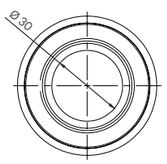

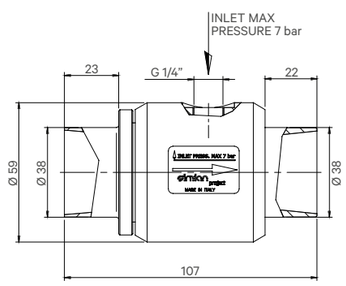

GENERAL FEATURES - AM-30T

Materials	Aluminium
Air inlet port	G-1/4
Inlet diameter	Ø-38
Outlet diameter	Ø-38
Air supply pressure	Max. 7 Bar
Recommended hose	Ø-10x1 - Ø-12x1

PERFORMANCES AND CONSUMPTION TABLE

SUPPLY PRESSURE (BAR)	OPENING ADJUSTMENT	VACUUM AT INLET [m Bar]	FLOW-RATE (Stm³/h)	FLOW-RATE [l/min]	AIR CONSUMPTION [l/min]	AMPLIFICATION RATIO
1	MIN	-6.0	136	2264	283	8
	INTERMEDIATE	-15,0	272	4536	567	8
	MAX	-10	174	2901	967	3
2	MIN	-15.0	224	3736	467	8
	INTERMEDIATE	-35.0	392	6531	933	7
	MAX	-40	285	4749	1583	3
3	MIN	-30.0	330	5600	700	8
	INTERMEDIATE	-60.0	504	8400	1400	6
	MAX	-65	429	7149	2383	3
4	MIN	-40.0	378	6300	1060	6
	INTERMEDIATE	-70.0	504	8400	2100	4
	MAX	-80	531	8850	2950	3
5	MIN	-50.0	450	7500	1250	6
	INTERMEDIATE	-120.0	600	10000	2500	4
	MAX	-110	630	10500	3500	3
6	MIN	-60.0	485	8085	1617	5
	INTERMEDIATE	-130.0	582	9699	3233	3
	MAX	-135	726	12099	4033	3
7	MIN	-70	580	9665	1933	5
	INTERMEDIATE	-140	696	11601	3867	3
	MAX	-130	870	14499	4833	3

SERIES AM-40T
AIR AMPLIFIERS

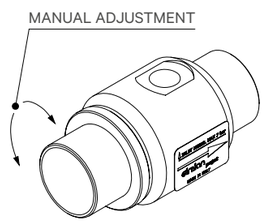

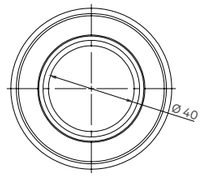

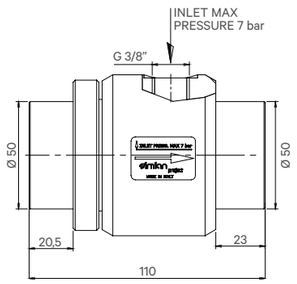

GENERAL FEATURES - AM-40T

Materials	Aluminium
Air inlet port	G-3/8
Inlet diameter	Ø-50
Outlet diameter	Ø-50
Air supply pressure	Max. 7 Bar
Recommended hose	Ø-12x1 - Ø-14x1

PERFORMANCES AND CONSUMPTION TABLE

(Theoretical values)

SUPPLY PRESSURE (BAR)	OPENING ADJUSTMENT	VACUUM AT INLET [m Bar]	FLOW-RATE (Stm³/h)	FLOW-RATE [l/min]	AIR CONSUMPTION [l/min]	AMPLIFICATION RATIO
1	MIN	-6.0	328	5464	683	8
	INTERMEDIATE	-15.0	656	10036	1367	8
	MAX	-10	417	6951	2317	3
2	MIN	-15.0	520	8864	1083	8
	INTERMEDIATE	-35.0	910	15189	2167	7
	MAX	-40	663	11049	3683	3
3	MIN	-30.0	680	11336	1417	8
	INTERMEDIATE	-60.0	1020	16998	2833	6
	MAX	-65	867	14451	4817	3
4	MIN	-40.0	636	10502	1767	6
	INTERMEDIATE	-70.0	848	14132	3533	4
	MAX	-80	891	14850	4950	3
5	MIN	-50.0	744	12402	2067	6
	INTERMEDIATE	-120.0	992	16532	4133	4
	MAX	-110	1041	17349	5783	3
6	MIN	-60.0	750	12500	2500	5
	INTERMEDIATE	-130.0	900	15000	5000	3
	MAX	-135	1125	18750	6250	3
7	MIN	-70	900	15000	3000	5
	INTERMEDIATE	-140	1080	18000	6000	3
	MAX	-130	1350	22500	7500	3

SERIES AM-50T

AIR AMPLIFIERS

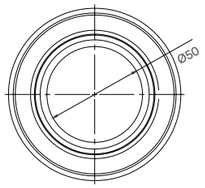

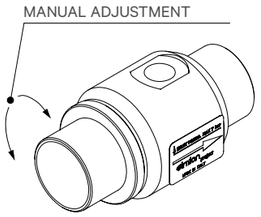

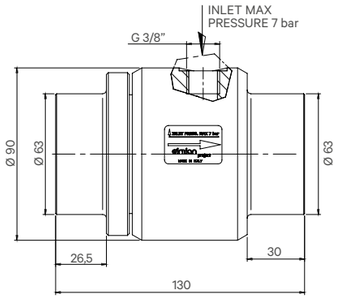

GENERAL FEATURES - AM-50T

Materials	Aluminium
Air inlet port	G-3/8
Inlet diameter	Ø-63
Outlet diameter	Ø-63
Air supply pressure	Max. 7 Bar
Recommended hose	Ø-10x1 - Ø-12x1

PERFORMANCES AND CONSUMPTION TABLE

(Theoretical values)

SUPPLY PRESSURE (BAR)	OPENING ADJUSTMENT	VACUUM AT INLET [m Bar]	FLOW-RATE (Stm³/h)	FLOW-RATE [l/min]	AIR CONSUMPTION [l/min]	AMPLIFICATION RATIO
1	MIN	-6,0	361	6010	751	8
	INTERMEDIATE	-15,0	722	11040	1504	8
	MAX	-10	459	7646	2549	3
2	MIN	-15,0	572	9750	1191	8
	INTERMEDIATE	-35,0	1001	16708	2384	7
	MAX	-40	729	12154	4051	3
3	MIN	-30.0	748	12470	1559	8
	INTERMEDIATE	-60.0	1122	18698	3116	6
	MAX	-65	954	15896	5299	3
4	MIN	-40,0	700	11552	1944	6
	INTERMEDIATE	-70,0	933	15545	3886	4
	MAX	-80	980	16335	5445	3
5	MIN	-50,0	818	13642	2274	6
	INTERMEDIATE	-120,0	1091	18185	4546	4
	MAX	-110	1145	19084	6361	3
6	MIN	-60,0	825	13750	2750	5
	INTERMEDIATE	-130.0	990	16500	5500	3
	MAX	-135	1238	20625	6875	3
7	MIN	-70	990	16500	3300	5
	INTERMEDIATE	-140	1188	19800	6600	3
	MAX	-130	1485	24750	8250	3

AIR-SPEED 25

BLOWING/SUCTION GUN

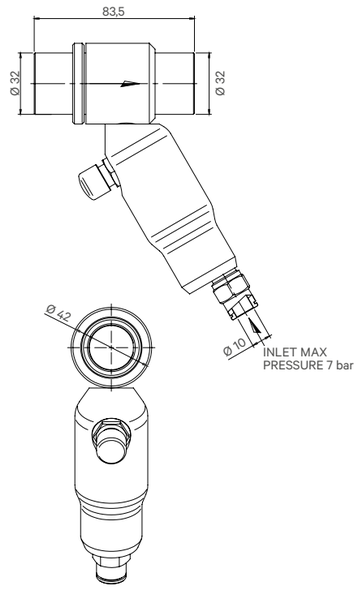

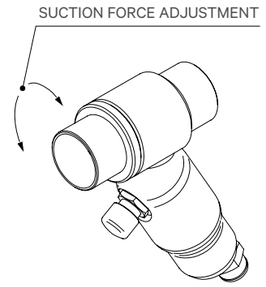

GENERAL FEATURES - AIR-SPEED 25

Materials	Aluminium
Air inlet port	Ø-10 x 1
Inlet diameter	Ø-32
Outlet diameter	Ø-32
Air supply pressure	Max. 7 Bar

N.B. It performs 2 functions: blowing and suction. To switch, simply turn the upper part of 180°. Adjustable flow-rate.

PERFORMANCES AND CONSUMPTION TABLE

SUPPLY PRESSURE (BAR)	OPENING ADJUSTMENT	VACUUM AT INLET [m Bar]	FLOW-RATE (Stm³/h)	FLOW-RATE [l/min]	AIR CONSUMPTION [l/min]	AMPLIFICATION RATIO
1	MIN	-8.5	32	533.3	58,3	9,1
	INTERMEDIATE	-17	60	1000.0	116,7	8,6
	MAX	-14	50	833.3	333,3	2,5
2	MIN	-18	72	1200.0	125,0	9,6
	INTERMEDIATE	-39	106	1766.7	283,3	6,2
	MAX	-44	100	1666.7	533,3	3,1
3	MIN	-30	95	1583.3	200,0	7,9
	INTERMEDIATE	-59	134	2233.3	416,7	5,4
	MAX	-68	136	2266.7	700,0	3,2
4	MIN	-43	112	1866.7	283,3	6,6
	INTERMEDIATE	-79	158	2633.7	650,0	4,1
	MAX	-93	160	2666.7	833,3	3,0
5	MIN	-55	126	2100.0	325,0	6,5
	INTERMEDIATE	-128	180	3000.0	783,3	3,8
	MAX	-117	195	3250.0	1066,7	3,0
6	MIN	-66	140	2333.3	416,7	5,6
	INTERMEDIATE	-138	210	3500.0	950,0	3,7
	MAX	-141	210	3500.0	1183,3	3,0
7	MIN	-79	152	2533.3	516,7	4,9
	INTERMEDIATE	-147	240	4000.0	1083,3	3,7
	MAX	-171	240	4000.0	1333,3	3,0

SERIES UGR

COANDA-EFFECT ADJUSTABLE NOZZLE FOR CLEANING OF PHOTOCELLS AND TUBES

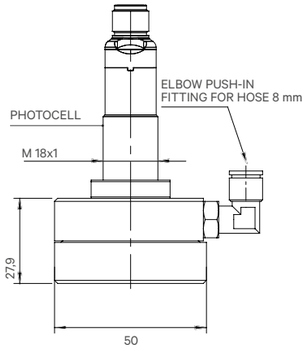

GENERAL FEATURES - UGR	
Materials	Anodised aluminium
Air supply port	On request
Supply pressure	Max. 3 Bar
Recommended hose	Ø-10x1 - Ø-8x1

Patented

SERIES UGR 1/8 - 1/4

COANDA-EFFECT ADJUSTABLE BLOWING NOZZLE

GENERAL FEATURES- UGR 1/8 - 1/4	
Materials	Anodised aluminium
Air supply port	Ø-8x1 - Ø-10x1
Supply pressure	Max. 7 Bar

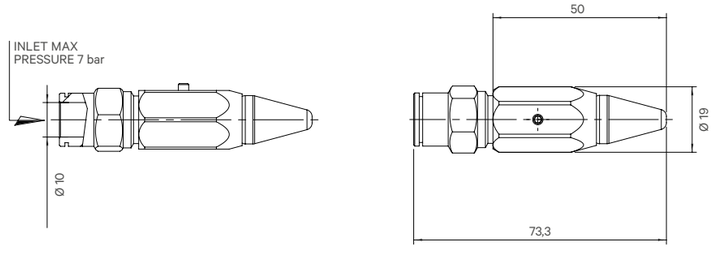

COOLER AIR SAVING

PATENTED SYSTEM

The best practice in cooling down enclosures involves also a correct distribution of the cold air, after it has been produced.

To make it possible, we supply air-blowing modules, connection fittings in technopolymer, and tubes with double insulation.
All this to have zero losses of cold energy and to get the highest effectiveness in your application.

All these accessories are customisable, to meet your specific demands.

Filter against impurities, for the fixation of the hot air extractor

Fittings for cold air distribution

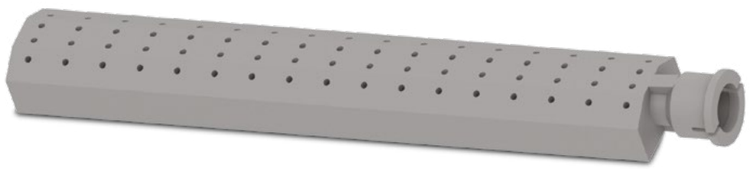

Customisable air-blowing module

Single air-blowing module

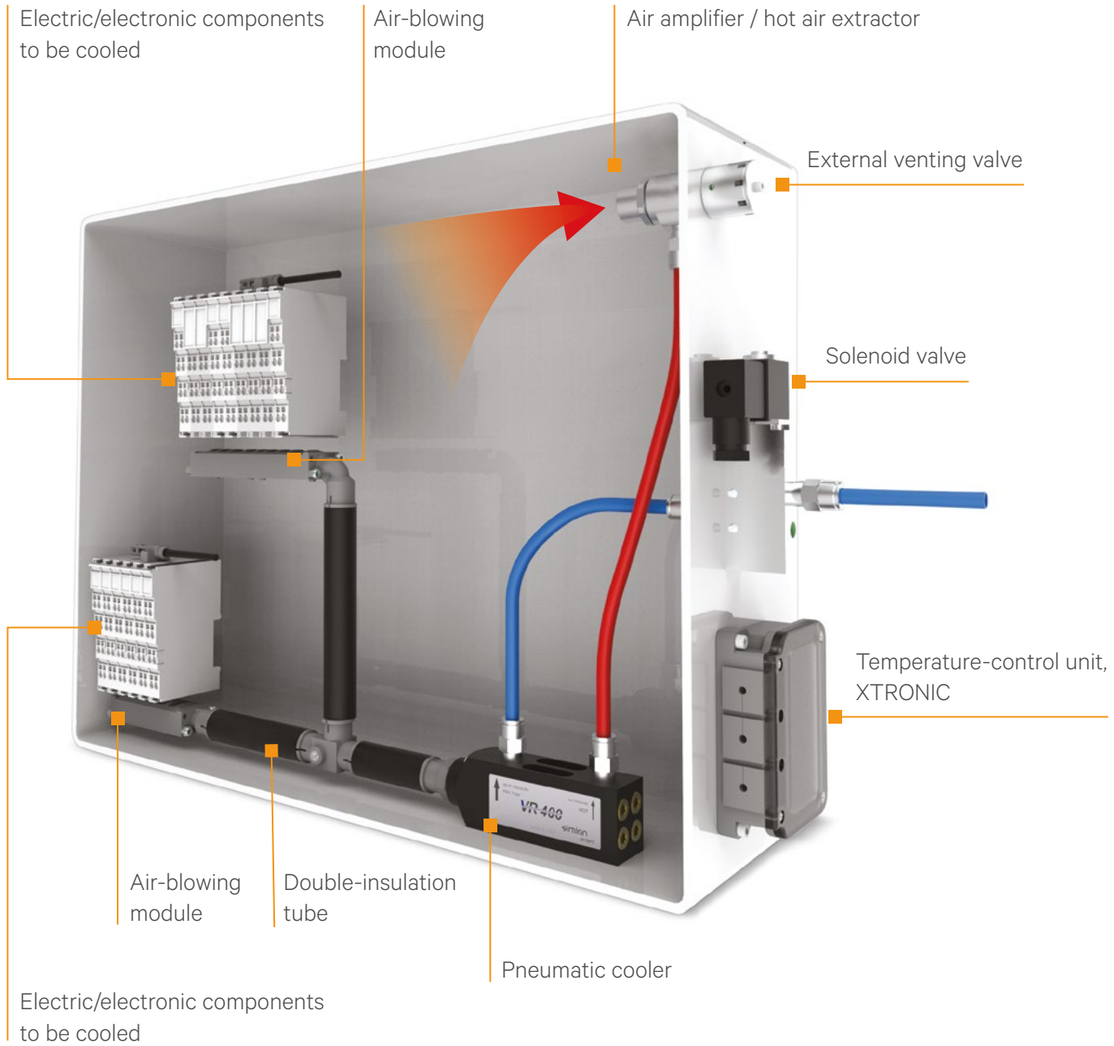

COOLER AIR SAVING
PATENTED SYSTEM

VR Series coolers and **AM Series** amplifiers used together to introduce cold air and extract hot air from electrical cabinets at the same time, using a single compressed air supply.

- Effective ventilation of the electrical cabinet
- Reduction of compressed air consumption
- Optimisation of cooling results

No matter how much cold air is introduced into an electrical cabinet, the effectiveness and efficiency of cooling will never be optimal unless the hot air generated by the electrical components is properly ventilated at the same time. With ventilation we mean both the creation of convection flows inside the cabinet which effectively distribute the air around the components, and the actual extraction of hot air from the cabinet itself.

By using the Cooler Air Saving patented system by Simian Project, two results are obtained: the first, using the VR Series coolers, is the prompt and precise cooling of the components that heat the cabinet the most. This thanks to the flexibility of installation (brackets and magnets) and the fact that the flow of cold air can be precisely directed on the main heat sources (by using adjustable nozzles). The second result is the proper ventilation of the electrical cabinet, thanks to the extraction power generated by the AM Series air amplifier, which is actuated by the hot air exhausted from the cooler.

The picture shows the system set up inside an electrical cabinet:

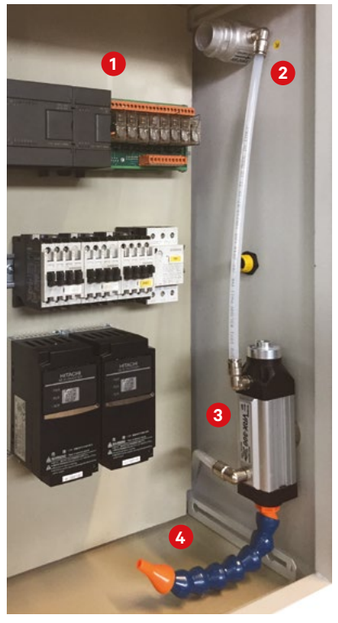

The VRX-500 cooler (fig.1) is actuated with compressed air from outside; the flow of cold air is directed, by using adjustable nozzles, on the electrical components that give off the most heat, while the exhaust of hot air is channelled by the red hose (fig. 3) to actuate the AM Series amplifier

The amplifier (fig.2) is mounted on the top right-hand side of the electrical cabinet; the pass-through installation allows it to suction and extract air from the cabinet; in the example of the picture, its position in the upper part of the cabinet ensures that the extraction occurs where most of the hot air accumulates and that even the electrical components located on the opposite side of the source of cold air remain at a temperature suitable for optimal functioning.

Even where pass-through mounting is not possible (for example in the event of installations in cabinets where IP protection must be guaranteed), the fitting of the amplifier inside the cabinet ensures forced recycling of air, which eliminates the concentration of hot air in the areas located furthest away from sources of cold air.

ACCESSORIES
AIR AMPLIFIERS

The patented system also works well together with industrial air-conditioners in electrical cabinets with the following characteristics:

- Large electrical cabinets where the cold air generated by the air-conditioner has trouble in reaching all parts of the cabinet;
- Electrical cabinets with electrical components laid out in such a way that the convection of air around the components is tricky;
- Electrical cabinets where the heat is generated by a few components that are located far from the area where the air-conditioner introduces the cold air.

N.B.: The Cooler Air Saving system works with VRX-300, VRX-500, and VRX-1000 coolers together with AM-20ES and AM-40ES amplifiers.

STRAIGHT PUSH-IN FITTING
FOR AIR SUPPLY

Part-number	Size	Amplifier
6512	6-1/8	AM-10ES
6512	8-1/8	AM-10ES
6512	8-1/4	AM-20ES
6512	12-3/8	AM-40ES

Male parallel with O-Ring

ELBOW PUSH-IN FITTING
FOR AIR SUPPLY

Part-number	Size	Amplifier
6522	6-1/8	AM-10ES
6522	8-1/8	AM-10ES
6522	8-1/4	AM-20ES
6522	12-3/8	AM-40ES

Male parallel with O-Ring

FILTER AGAINST IMPURITIES, FOR FIXATION OF HOT AIR EXTRACTOR

Part-number	Amplifier
AC26	AM-30T
AC31	AM-20-25T
AC32	AM-10-15T
AC43	AM-40T

SERIES HSC

Effective, maintenance-free, and suitable for any flow-rate and application

The main strengths of the condensate separators **Series HSC** are effectiveness, reliability, and versatility. The effectiveness in the removal of condensate is obtained through the particular design of the **DRYVOLUTION** system: thanks to a series of concentric flanges, assembled with a precise angle of incidence with respect to the direction of inlet flow, they generate a compressed air expansion (which takes place inside a chamber downstream of the flanges) that brings about a considerable decrease in the temperature and consequently the condensation of humidity. This is then directed to the bottom of the bowl. The reliability derives from the fact that no electric power and no chemical substance is used, and moreover there is no moving part (with the exception of the sole automatic drain): the performance is steady and maintenance is practically zero. The versatility is guaranteed by the performances and the technical features: the range covers a wide spectrum of flow-rates and the materials used, together with the assembly, make it a very sturdy product. Therefore, it perfectly suits many different applications: upstream of coalescing filters (cleaning of air inside clean rooms), downstream of big compressors for air distribution inside factories, on board of trucks and agricultural machines, upstream of pneumatic tools, etc.

- Water separation through the decrease in the temperature of compressed air
- No moving part, except for the automatic drain
- Easy to install
- Made in technopolymer and brass OT58
- One size, with 3 possible flow-rate settings
- Maintenance-free
- No electricity or chemical substances required
- No sparks or interferences caused
- Instant operation
- Possibility of combination with cooler VR50 to further lower temperatures

AIREKA

SERIES - HSC - T2 - HIGH SEPARATOR CONDENSE
THERMODYNAMIC DRYER

GENERAL FEATURES - HSC

Type of functioning	Thermodynamic
Materials	Technopolymer
Ports	1/2" G (with bushings in brass)
Weight	500 g
Installation	Vertical
Operating temperature	-10°C + 50°C
Condensate drain	Automatic, by float
Medium	Compressed air
Operating pressure	Max. 12 Bar
Max. flow-rate (3 possible settings)	1266* Nl/min at max. opening
Factory setting	Intermediate opening (1100 Nl/min)

*values at P1= 6 Bar and Delta P= 0.5 Bar.

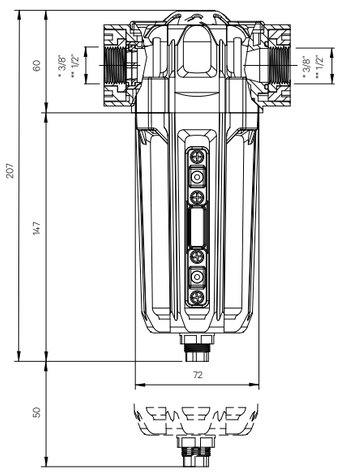

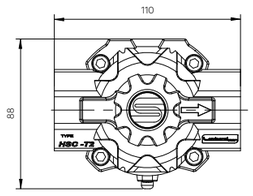

*HSC-02-38-SCC
**HSC-02-12-SCC

ACCESSORIES
THERMODYNAMIC DRYER

WALL BRACKET

PART-NUMBER	DIMENSIONS
HSC-13	150 x 30 x 2,50

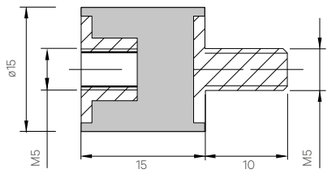

ANTI-VIBRATION SUPPORT

PART-NUMBER	DIMENSIONS
HSC-17	15 x 15 M5

SOME EXAMPLES OF APPLICATIONS

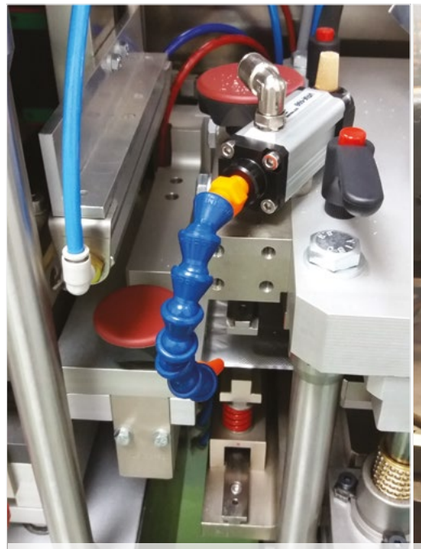

Cooling of blisters

Cooling of tools

Cooling of belt sander

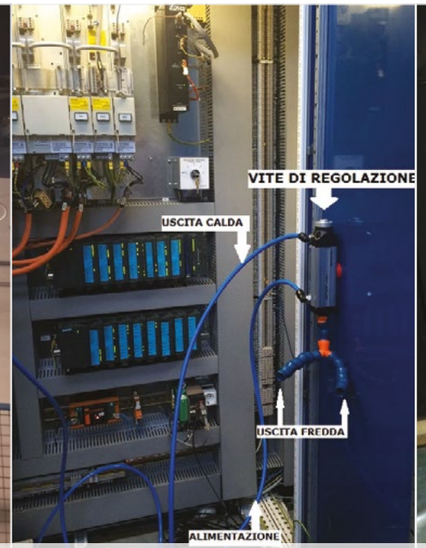

Cooling of control cabinets

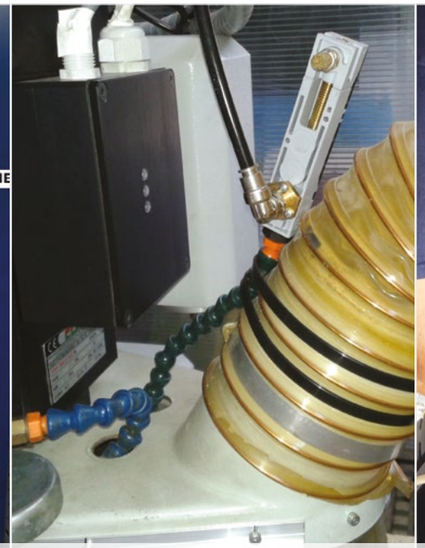

Cooler for plastics' processing

Amplifier for suction of liquids

Cooling of blades

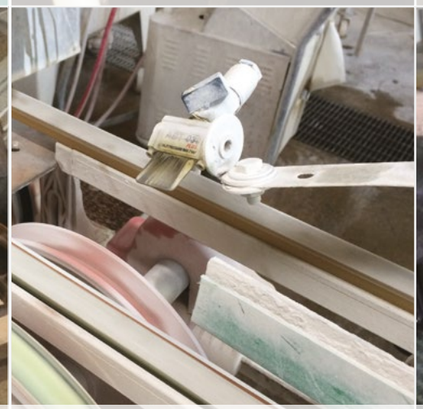

Air knife to clean tiles

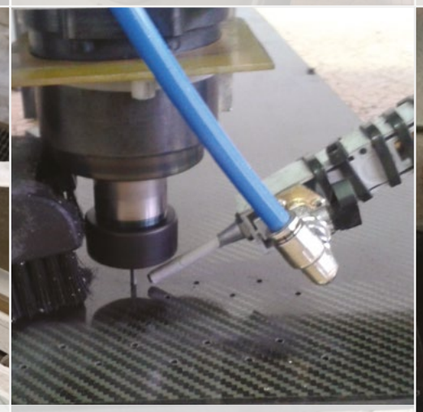

Cooler for carbon fiber's tooling

Cooling of sprues - Moulding sector

Cooler for making window fixtures

Cooler for machine-tool

Cooling of moulds in foundries

Cooling of grinder

Cabinet cooling - Ceramic industry

SOME EXAMPLES OF APPLICATIONS

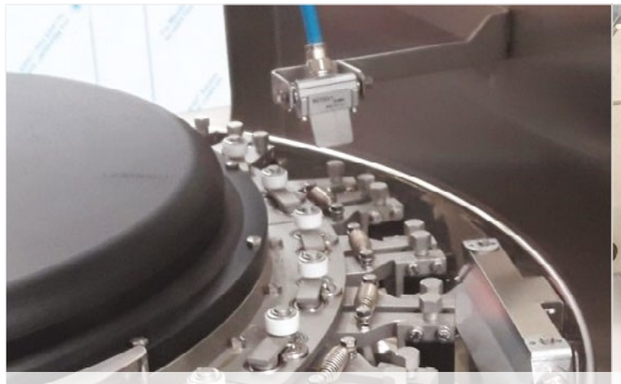
Air knife to dry pharma containers

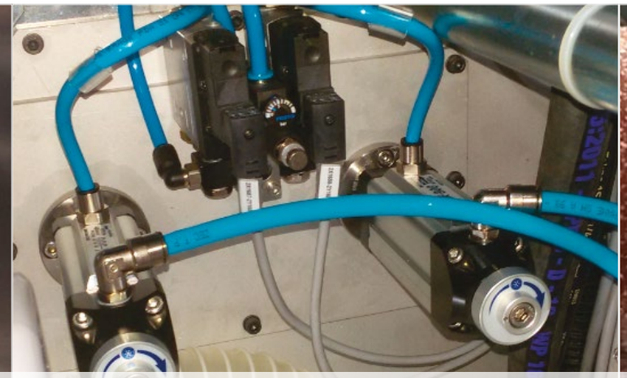
Cooling of glueing station


Cooling down of tool - Woodworking sector


Air knife for defective parts' discard

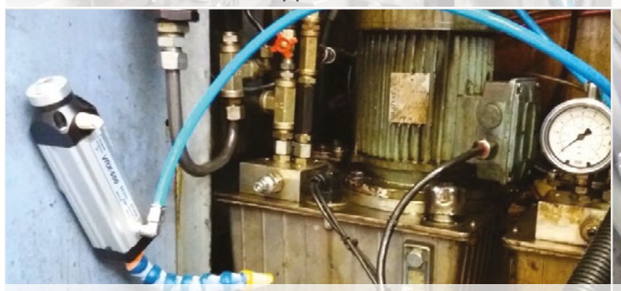
Cooler for hydraulic application


Amplifier to dry plastic wire

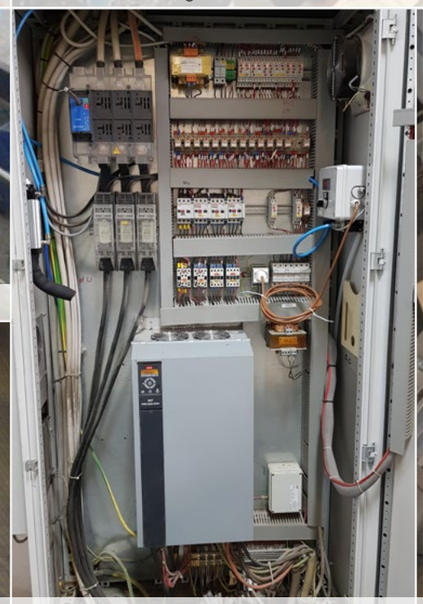
Cooling of cabinets (with control unit)


Cooling of blades


Cooling of control cabintes


Air amplifiers for profiles' cleaning


Air knife to clean machine-tool window


Air-knife to stretch films


Cooling of cabinets


Cooling of junction boxes

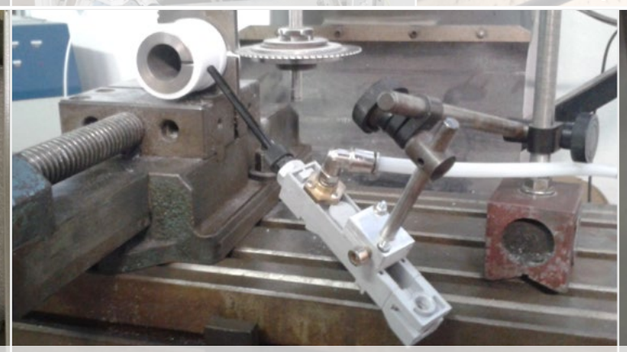
Cooling of a tool - Plastics sector


Air knives to detach metal sheets